Standard Specifications and Details

for the

Highway and Utility Construction

Town of Erwin
Steuben County, New York

May 2012
Revised July 2014

Prepared by:
Hunt Engineers, Architects & Land Surveyors, PC
Airport Corporate Park, 100 Hunt Center
Horseheads, NY 14845-1019
Phone (607) 358-1000, Fax (607) 358-1800

PREFACE

The purpose of this regulation is to regulate the laying out and construction of highways, wastewater distribution systems, wastewater collection systems and stormwater collection systems in the Town of Erwin.

TABLE OF CONTENTS

SECTION 1.00 DEFINITIONS AND ABBREVIATIONS

1.01 GENERAL DEFINITIONS

1.02 TECHNICAL DEFINITIONS

1.03 ABBREVIATIONS

SECTION 2.00 GENERAL PROVISIONS

2.01 GENERAL

2.02 QUALITY OF MATERIALS

2.03 INSPECTIONS

2.04 CLEARING AND GRUBBING

2.05 EARTHWORK

2.06 MAINTENANCE AND PROTECTION OF TRAFFIC

2.07 CONCRETE

2.08 PERMITS

2.09 ACCEPTANCE PROCEDURES

2.10 PLANTINGS WITHIN TOWN UTILITY EASEMENTS

2.11 RETAINING WALLS

2.12 OSHA STANDARDS

2.13 SAFETY AND HEALTH HAZARDS

2.14 WORK HOURS

SECTION 3.00 STREETS

3.01 GENERAL

3.02 DESIGN CRITERIA

3.03 TYPICAL CROSS SECTION ELEMENTS

3.04 GENERAL DESIGN ELEMENTS

3.05 SPECIFIC DESIGN ELEMENTS

3.06 MATERIALS

3.07 CONSTRUCTION AND INSPECTION

SECTION 4.00 SOIL EROSION, SEDIMENTATION CONTROL AND LANDSCAPING

4.01 SCHEDULING

4.02 TEMPORARY MEASURES

4.03 PERMANENT MEASURES

4.04 COMPUTATIONS

4.05 CONSTRUCTION SEQUENCE

SECTION 5.00 PIPE TRENCHES

5.01 EXCAVATION AND PREPARATION

5.02 PIPE LAYING AND BACKFILLING

5.03 PAVEMENT REPAIR

5.04 TUNNELING

5.05 DIRECTIONAL DRILLING

SECTION 6.00 WATER DISTRIBUTION

6.01 WATER DISTRIBUTION PIPE

6.02 FIRE PROTECTION

6.03 VALVES AND APPURTENANCES

6.04 WATER SERVICE TAPS

6.05 TESTING AND INSPECTION

6.06 REPAIR OF WATER LINES

6.07 WELL ABANDONMENT

6.08 CROSS CONNECTION CONTROL POLICY

SECTION 7.00 SANITARY SEWER

7.01 GENERAL REQUIREMENTS

7.02 GRAVITY SEWER

7.03 FORCE SEWER MAINS

7.04 SERVICE CONNECTIONS

7.05 WASTEWATER PUMP STATIONS

7.06 INSPECTION, TESTING AND REPAIR

SECTION 8.00 STORM DRAINAGE

8.01 DESIGN

8.02 MATERIALS

8.03 INSPECTIONS AND TESTING

SECTION 9.00 PRIVATE UTILITIES

9.01 GENERAL REQUIREMENTS

9.02 DESIGN REQUIREMENTS

9.03 PERMITTING REQUIREMENTS

9.04 CONSTRUCTION REQUIREMENTS

9.05 CONSTRUCTION CLOSE-OUT REQUIREMENTS

SECTION 10.00 AS-BUILT CHECK LIST

10.01 AS-BUILT INFORMATION

10.02 SITE DATA

10.03 GENERAL INFORMATION

10.04 STREETS (Public or Private)

10.05 STORM DRAINAGE

10.06 WATER SYSTEM

10.07 SANITARY SEWER SYSTEM

SECTION 11.00 PERMITS AND FORMS

DEMOLITION PERMIT

WELL ABANDONMENT FORM

HIGHWAY/UTILITY WORK PERMIT

SECTION 12.00 STANDARD INSURANCE REQUIREMENTS

STANDARD DETAILS

SECTION 1.00

DEFINITIONS AND ABBREVIATIONS

1.01. GENERAL DEFINITIONS

See all Standards listed for any additional Definitions

AIR CURTAIN BURNING – A stationary or portable combustion device that directs a plane of high velocity forced air into a pit with walls in such a manner as to maintain a curtain of air over the surface of the pit and a recirculating motion of air under the curtain.

BUILDING INSPECTOR – The Building Inspector of the Town of Erwin or his authorized representative.

CERTIFICATE OF OCCUPANCY – Approval granted by the Town of Erwin for a new or renovated structure to be occupied.

CODE – The Town of Erwin Code of Ordinances, including the Unified Development Ordinance.

CODE ENFORCEMENT OFFICER (CEO) – The duly appointed Code Enforcement Officer of the Town of Erwin.

COLLECTOR ROADS – Roads which carry traffic from minor roads to major roads, including the principal entrance roads of a residential development and roads for circulation within a development.

CONTRACTOR – The entity performing the work indicated in the plans.

DEAD END ROAD or CUL-DE-SAC – A road or a portion of a road with only one vehicular access point.

DETAILS – The drawings found within the Town of Erwin Standard Specifications and Details Manual.

EASEMENT – An interest in land owned by another that entitles its holder to a specific use.

FIRE OFFICIAL – The Fire Chief, an assistant or other representative duly authorized by the Town of Erwin.

HIGHWAY – Includes any type of street or thoroughfare constructed or planned to be constructed for dedication to the Town of Erwin as a public highway pursuant to law.

INSPECTOR – The Construction Inspections Administrator, an assistant, or other representative duly authorized by the Town of Erwin.

INVERT – The lowest point in the internal cross section of a pipe or culvert.

MAJOR ROAD – Roads which are used or designated primarily for through or heavy traffic (County and State Roads).

MARGINAL ACCESS ROADS – Minor roads which are parallel to and adjacent to major roads, and which provide access to abutting properties and protection from through traffic.

MINOR ROAD – Roads which are used primarily for access to the abutting properties.

OWNER – Developer, Contractor, or Land Owner.

PLANS – The approved design drawings which show the work to be done.

PLANNING BOARD – Planning Board of the Town of Erwin as designated by Town Board per Section 271 of the Town Law.

PUBLIC ROAD – A right -of-way for vehicular traffic, whether designated as a street, highway, thoroughfare, parkway, road, avenue, boulevard, lane, place, alley, or however otherwise designated, that is built to Town Specifications and dedicated to the Town for maintenance, but not including a private driveway serving one or two properties.

RIGHT OF WAY – The area which encompasses public streets, sidewalks, and utility strips.

SHALL – Mandatory not directory.

SPECIFICATIONS – The Town of Erwin "Standard Specifications and Details" manual.

SUBBASE – Base course within the sublayer of an asphalt surface that is placed on the subgrade surface.

SUBGRADE – The portion of the roadbed prepared as a foundation for the stone and asphalt or concrete pavement structure.

TOWN – Town of Erwin, New York

TOWN ENGINEER – Representative duly authorized by the Town.

1.02. TECHNICAL DEFINITIONS

ACCEPTABLE BACKFLOW PREVENTION DEVICE – A New York State Department of Health approved air gap, reduced pressure zone device or double check valve assembly as used to contain potential contamination within a facility.

ACCEPTABLE DEVICES – Devices or assemblies found to be acceptable for containment control in New York State in accordance with the Department of Health requirements as outlined in section 8.

AESTHETICALLY OBJECTIONABLE FACILITY – Facility in which substances are present, which if introduced into the public water supply could be a nuisance to other water customers, but would not adversely affect human health. Typical examples of such substances are: food-grade dyes, hot water, stagnant water from fire lines in which no chemical additives are used, etc.

AIR GAP SEPARATION – Unobstructed ventricle distance through the free atmosphere between the lowest plumbing fixture, or other device and the flood level rim of the receptacle. The differential distance shall be at least double the diameter (D) of the supply pipe. In no case shall the air gap be less than 1”.

BACKFLOW – Unwanted reversal of flow of water, introduced by a differential in pressure, which causes the flow of water or other liquids and / or gases into the distribution pipes of a public water supply from any source other than its intended source.

BACK PRESSURE – Resulting backflow of contamination, polluted, or otherwise unacceptable quality from a plumbing fixture or other customer source(s) into public water supply system due to a greater pressure within the customer’s water system.

BACKSIPHONAGE – Backflow of a contaminated or polluted water, or water of questionable quality from a plumbing fixture or other customer source(s), into a public water supply system main. Due to a temporary negative or sub-atmospheric pressure within the public water supply system.

CUSTOMER – A water user served by a public water system.

CUSTOMER'S WATER SYSTEM – Any piping used to convey water supplied by a public water supply system throughout a customer's facility.

CONTAINMENT – Cross-connection control which isolates the customer's facility from the public water system so as to provide the protection necessary to prevent contamination of the public water supply in the event of backflow from the customer's facility.

CONTAMINATION – Presence in water of a substance that tends to degrade its quality.

CROSS-CONNECTION – Physical connection through which a water supply could be contaminated.

DEGREE OF HAZARD – Rating of a facility as Hazardous, Aesthetically Objectionable or Non-Hazardous.

DOUBLE CHECK VALVE (DCVA) ASSEMBLY – Acceptable means to single independently acting check valves, including tightly closing shutoff valves located at each end of the assembly and suitable connections for testing the water tightness of each check valve.

HAZARDOUS FACILTIY – One in which substances may be present which if introduced into the public water supply system would or may endanger or have an adverse effect on the health of other water customers. Typical examples: Laboratories, Sewage Treatment Plants, Chemical Plants, Hospitals, and Mortuaries.

INTERCONNECTION – Joining of two independently operated public water supply distribution systems.

LOCAL HEALTH DEPARTMENT ENGINEER – The City, County, District, or Regional Health Department Engineer having jurisdiction.

NON-HAZARDOUS FACILITY – A facility which does not require the installation of an acceptable backflow device.

PLUMBING CONTROL – Prevention and elimination of cross-connections within the customer's water system by enforcement of building or plumbing codes.

PUBLIC WATER SUPPLY SYSTEM – Supplier of water system including the source, treatment works, transmission mains, distribution system and storage facilities serving the public.

REDUCED PRESSURE ZONE (RPZ) DEVICE – Acceptable means a minimum of two indecently acting check valves, together with an automatically operated pressure differential relief valve located between the two check valves. During normal flow and at the cessation of normal flow, the pressure between these two checks shall be less than the upstream (supply) pressure. In case of leakage of either check valve, the differential relief valve, by discharging to the atmosphere, shall operate to main pressure at 2 psi less than the supply pressure. The unit must include tightly, closing shutoff valves located at each end of the device, and each device shall be fitted with properly located test cocks.

SUPPLEMENTARY SUPPLY – Any water source or system other than the public water supply, which is available within the water customer's facility.

SUPPLIER OF WATER – The owner or operator of a public water system.

1.03. ABBREVIATIONS

AASHTO	American Association of State Highway and Transportation Officials
A.B.S.	Acrylonitrile Butadiene Styrene
A.F.F.	Above Finished Floor
ANSI	American National Standards Institute
ASTM	American Society for Testing and Materials
AWWA	American Water Works Association
^{o}C	Degrees Centigrade
CBR	California Bearing Ratio
CO	Certificate of Occupancy
DIP	Ductile Iron Pipe
DIPRA	Ductile Iron Pipe Research Association
ETJ	Extraterritorial Jurisdiction
^{o}F	Degrees Fahrenheit
ft	Feet
gpd	Gallons per day
gpm	Gallons per minute
ID	Inside Diameter
lbs	Pounds
MSL	Mean Sea Level
MUTCD	Manual on Uniform Traffic Control Devices
NYDOH	New York Department of Health
NYSDEC	New York State Department of Environmental Conservation
NYSDOH	New York State Department of Health
NYSDOT	New York State Department of Transportation
N.E.C.	National Electric Code
NYPE	New York Registered Professional Engineer
NYPLS	New York Professional Land Surveyor
NFPA	National Fire Protection Association
NRCS	Natural Resource Conservation Service (formerly SCS)
OD	Outside Diameter
OSHA	Occupational Safety and Health Administration
P.C.	Point of Horizontal Curvature
ppm	Parts per million
psi	Pounds per square inch
PSIG	Pounds per square inch gauge
P.T.	Point of Tangency
PVC	Polyvinyl Chloride
P.V.C.	Point of Vertical Curvature
P.V.T.	Point of Vertical Tangency
SPDES	State Pollutant Discharge Elimination System
SU	Single Unit Truck (with 20 foot wheelbase and 30 foot overall length)
UL	Underwriters' Laboratories, Inc.
V	Volts
VAC	Voltage - Alternating Current

SECTION 2.00

GENERAL PROVISIONS

2.01 GENERAL

All construction shall conform to the plans, Specifications, and Codes applicable. Design of streets, water systems, sanitary sewer systems, storm drainage systems, and grading plans shall be signed and sealed by a licensed NYPE, RLS, Architect or Landscape Architect.

Prior to any excavation 1-800 DIG-SAFE shall be notified.

2.02 QUALITY OF MATERIALS

It is the intent of this specification to provide materials which are of the highest quality and free from defects. Materials not specified herein may be used upon written approval by the Town Engineer.

2.03 INSPECTIONS

The Design Engineer shall be retained by the Developer for Construction Inspection. Inspector is to provide Daily Reports, pictures of work, and certification of all work to the Town of Erwin prior to any work being accepted by the Town. The Contractor shall provide the necessary manpower and equipment required for inspections. The presence of the Engineer or Inspector at the work site shall in no way lessen the Contractor's responsibility for conforming to the plans and specifications. Should the Engineer or Inspector accept materials, or work that does not conform with plans and specifications, whether from lack of discovery or for any other reason, it shall in no way prevent later rejection of, or corrections to, the unsatisfactory materials or work when discovered. The Contractor shall have no claim for losses suffered due to any necessary removals or repairs resulting from the unsatisfactory work. Any work which has been covered without the Inspector's approval, shall, at the Inspector's request, be uncovered and be made available for inspection at the Contractor's expense. Work performed before or after Town staff's normal work hours or during the weekend or Town Holidays shall comply with the Code and shall include only such tasks that do not require observation by an Inspector.

2.04 CLEARING AND GRUBBING

The work of clearing and grubbing consists of the cutting, removal, and satisfactory disposal of all vegetation and surface debris as per NYSDOT Specification Section 201. No vegetation or surface debris shall be burned.

Clearing and grubbing shall be conducted in a manner to prevent damage to adjacent property and vegetation that is intended to remain growing. Blasting shall not be permitted.

2.05 EARTHWORK

All earthwork shall be as per NYSDOT Specifications Section 203 and all applicable Standard Sheets.

Earthwork consists of the removal of earth from its natural location, or the depositing of such material into the proper fill areas as designated on the plans. No material shall be staged or placed with a roadway.

Fill material shall be free from construction material, debris, frozen material, organic matter or unstable material.

Subbase work shall be as per NYSDOT Specification Section 304. The top twelve (12) inches of subbase under a proposed roadway, and the entire base course, shall be compacted to a density of 95 PERCENT maximum Standard Proctor dry density as determined by AASHTO method T99. For that portion of fill under roadways and extending at a slope of 1 to 1 beyond the back of curb, and for areas under proposed sidewalks, compact to a density of NO LESS THAN 95 PERCENT of the maximum Standard Proctor dry density as determined by AASHTO method T99. Fill material shall be placed in lifts of 8 inches or less of uncompacted soil.

Other fill material shall be compacted to a density of NO LESS THAN 90 PERCENT of the maximum Standard Proctor dry density as determined by AASHTO method T99. Backfill material shall be placed in lifts of 12 inches or less of uncompacted soil.

In areas where landscaping and vegetation is proposed, within the median or behind the back of curb, the top 12" shall be prepared to support installation and growth of landscaping and vegetation.

2.06 MAINTENANCE OF TRAFFIC

A. General

When construction occurs in a traffic zone, traffic control devices must be erected, maintained, relocated, and removed in accordance with the plans, specifications, NYSDOT Specification Section 619 including applicable Standard Sheets, and MUTCD. This requirement shall apply for all construction occurring on public streets, including installation and rehabilitation by landscaping contractors, and construction or repairs by utility companies.

B. Materials

Materials used in the fabrication and installation of construction traffic control devices shall be in accordance with the MUTCD.

C. Installation and Maintenance

Existing public streets or highways shall be kept open to traffic at all times unless permission to close the street, or portions thereof, is granted by the Town Engineer. Emergency Services must be contacted BY THE CONTRACTOR A MINIMUM OF 24 HOURS before any streets are closed or partially closed.

Work on any project shall not start until all traffic control devices required for the particular work activity are properly installed.

Traffic control devices shall be properly maintained, relocated as necessary, cleaned and operated during the time they are in use. During periods when use of the devices is not warranted, they shall be removed from the work area, covered, or otherwise positioned so that they do not convey their message to the traveling public.

Weeds, brush, trees, construction materials, equipment, etc. shall not be allowed to obscure any traffic control device in use.

Competent and properly trained, attired and equipped flaggers using "stop" and "slow" paddles shall be provided when two-way traffic cannot be maintained.

The Contractor shall assume full responsibility for the continuous and expeditious maintenance or replacement of all construction warning signs, barricades, and other traffic control devices. The Contractor shall continuously review and maintain all traffic control measures to assure that adequate provisions have been made for the safety of the public and workers. Failure to maintain all traffic control devices in a satisfactory condition shall be cause for suspension of construction operations until proper traffic control is re-established.

2.07 CONCRETE

Concrete shall be as per Section 500 of the NYSDOT Standard Specifications. Any concrete poured that has a slump over 4 inches per ASTM C143, or has a batched time of more than 90 minutes, will be considered unacceptable. Concrete shall not be deposited on frozen subgrade. Concrete shall not be poured when the air temperature is falling below 40°F, and the predicted low temperature for the succeeding 24 hour period is less than 32°F.

All concrete when placed in the forms shall have a temperature of between 50°F and 90°F and shall be maintained at a temperature of not less than 50°F for at least 72 hours for normal concrete and 24 hours for high early strength concrete, or for as much time as is necessary to secure proper rate of curing and designed compressive strength.

Concrete shall be air entrained with 5-7% air. Retarders and accelerators shall be used only as directed by the Town Engineer.

2.08 PERMITS

Any and all permits required for an action shall be in effect prior to the commencement of construction.

A. Town Permits

1) Driveway Permit - A Driveway Permit is required for all residential pavement cuts on Town of Erwin maintained streets. The drive shall be indicated on the plot plan. This permit is obtained from the Town of Erwin Highway Superintendent. A DRIVEWAY PERMIT MUST BE OBTAINED PRIOR TO ANY CONSTRUCTION.

2) Street Cut Permit – A cut permit shall be obtained before commencement of cutting or excavation in any Town of Erwin owned street.

3) Highway Work Permit – A Highway Work Permit shall be obtained for work where Town of Erwin has jurisdiction. Any deviation from these standard specifications shall be indicated on the initial highway work permit application.

4) Sewer Systems – Before commencement of construction of a sewage disposal system, the owner shall obtain a written permit signed by the Building Inspector. The application for such permit shall be made on a form furnished by the Town which the applicant shall supplement by any plans, specifications and other information as are deemed necessary by the Building Inspector. A permit and inspection fee shall be paid to the Town at the time the application is filed.

5) Well Abandonment

6) Demolition Permit

B. State Permits

1) NYSDEC – Coverage under the NYSDEC General SPDES Permit must be obtained prior to completion of any work if more than 5 acres of land are disturbed for single family residential purposes or 1 or more acres for any non-residential use.

2) NYSDOT – It is the responsibility of the Owner/Developer to obtain NYSDOT permits when working in NYSDOT right-of-way. ALL APPLICABLE PERMITS MUST BE OBTAINED PRIOR TO ANY CONSTRUCTION.

a) Driveway Permit – Any project which requires a new access to an NYSDOT roadway requires a driveway permit. All submittals must be accompanied by five (5) sets of plans and five (5) copies of the permit. The fee is determined by the NYSDOT.

b) Highway Work Permit – Any project within the NYSDOT Right-of-way requires a permit.

2.09 ACCEPTANCE PROCEDURES

All improvements intended for public maintenance are eligible for acceptance by the Town of Erwin following the procedures outlined below:

A. Application Process

1) Applications shall be accompanied by three (3) copies of the plans and profiles of each highway showing existing and proposed grades as well as all the necessary detail required by the provisions of this publication.

2) Applications shall be accompanied by a proposed warranty deed conveying to the Town, with all necessary releases from mortgages or other claimants. Such deed shall describe the street to be conveyed as shown on a map and shall state the date on which said map was filed in the Steuben County Clerk's office and number thereof.

3) Additional Right-of-Way may be requested by the Town depending upon the terrain and anticipated traffic conditions. The Owner will be required to show topographic conditions at all major culverts, deep fill, or cut areas and major traffic intersections. This information will be used to determine the additional right-of-way needs.

4) Requirements for Dedication

a) Survey – All owners shall have had the land comprising the highway surveyed, mapped, and a map thereof shall have been filed in the Steuben County Clerk's Office.

b) As-built Mapping

c) File with County Clerk

d) Boundary markers – Adequate metal, stone, or concrete boundary markers shall be inserted in a permanent manner at intervals of not less than 500 feet on tangents and at P.C. and P.T. of curves along all boundary lines of such highways.

5) Maintenance Bond

a) The top course shall not be paved until at least one (1) winter season has passed or as otherwise agreed to, in writing, by the Town. During this time the Contractor shall be responsible for all Maintenance including plowing until the final acceptance has occurred.

b) The Town of Erwin has the option to ask the Contractor to core the pavement of a roadway at any time at the Contractors expense.

c) Upon completion of work there will be a one (1) year maintenance bond in place for the entire constructed area. A roadway will be considered complete after the completion of the top course.

2.10 PLANTINGS WITHIN TOWN UTILITY EASEMENTS

A reasonable effort shall be expended to avoid the damage or destruction of plantings within an easement during the course of servicing. In the event that plantings are damaged or destroyed during servicing, the Town will not be liable for the damage or destruction of plantings. The Town will reseed as necessary for erosion control.

Small and medium shrubs, ground covers, or grasses may be planted within an easement. Small trees (under 30 feet in height at maturity) must be planted a minimum of 10 feet from the centerline of the closest pipe within the easement or 10 feet from the center of the easement, whichever is greater. Large trees shall not be placed within any Town utility easement.

2.11 RETAINING WALLS

Retaining walls higher than 5 feet shall be designed by either a licensed NYPE or Architect. The design shall be submitted to the Town Engineer for approval prior to construction, and a building permit may be required as well. Safety rails or fencing may also be required.

2.12 OSHA STANDARDS

Contractors and their employees must comply with all OSHA standards. The Contractor shall file the 10 Hour Safety course certifications with the Town of Erwin

2.13 SAFETY AND HEALTH HAZARDS

The operations of any Contractor shall not expose Town of Erwin employees or residents to any hazardous chemicals or other occupational safety and health hazards. All contractors working on Town of Erwin projects or on Town of Erwin property comply with OSHA standards concerning the handling and storage of hazardous chemicals, specifically, the visible display of warning and information placards for use by emergency services. The contractor shall also advise the Town of Erwin of the appropriate control measures to be used by the Town of Erwin employees to prevent exposure and to minimize risk of exposure.

2.14 WORK HOURS

Work hours shall be within the hours of 7:00 AM and 6:00 PM daily, Monday through Friday. Activity and access shall be confined to the designated staging area. Activity in the staging area shall be conducted in a manner that causes minimal disruption. Shift work that results in work activity outside the hours of 7:00 AM to 6:00 PM, or on weekends, may only occur with the permission the Town of Erwin.

SECTION 3.00

STREETS

3.01 GENERAL

All roads (private and public) shall be designed and constructed to conform to these specifications unless NYSDOT Standard Specifications are applicable. The latest revision of the NYSDOT Standard Specifications shall be used on all existing state roads, extensions of existing state roads, or roads to be maintained by the state. Street design is based on criteria dictated by the street classification, design speed, surrounding terrain, and traffic volumes. Private streets will be permitted only for commercial uses.

3.02 DESIGN CRITERIA

A. General

Road systems shall be designed with due regard to the needs for: convenient traffic access and circulation; traffic control and safety; access for fire fighting, snow removal, and street maintenance equipment; and storm water drainage and sewage disposal. Roads shall be designed to accommodate the prospective traffic, so arranged as to separate through traffic from neighborhood traffic insofar as possible, and coordinated to compose a convenient

All streets shall be networked to provide safe and efficient access to all properties. No properties shall be landlocked or excessively removed from the major street facilities.

B. Street Classifications

Streets are classified according to the nature of the traffic they serve, and are networked to provide a balance between access and mobility.

1) Private Roads

Private roads serve no more than two (2) residential lots and remain in ownership of and are maintained by a developer or development association and are not dedicated to the Town for maintenance.

2) Public Roads

A right-of-way for vehicular traffic, whether designated as a street, highway, thoroughfare, parkway, road, avenue, boulevard, lane, place, alley, or however otherwise designated, that is built to Town specifications and dedicated to the Town for maintenance, but not including a private driveway serving one or two properties.

a. Major Roads – Roads which are used or designed primarily for through or heavy traffic (County and State Roads).

b. Collector Roads – Roads which carry traffic from minor roads to major roads, including principal entrance roads of a residential development and roads for circulation within a development.

c. Minor Roads – Road which are used primarily for access to the abutting properties.

d. Marginal Access Roads – Minor roads which are parallel to and adjacent to major roads, and which provide access to abutting properties and protection from through traffic.

e. Dead-end Road or Cul-de-sac – A road or portion of a road with only one vehicular access. The Town of Erwin limits the use of a dead-end road or cul-de-sac and special permission must be obtained from the Town of Erwin in order to design such roads.

f. Alleys – Minor rights-of-way which are used primarily for vehicular service access to the back or the side of lots which are otherwise abutting on another road.

C. Design Speed

Design speed is the maximum safe speed that can be obtained on a street when conditions are favorable enough for the design features of the highway to control. The design speed chosen for the design of a road should be logical with respect to topography, the adjacent land use, and the classification of the street. Every effort should be made to use as high a design speed as practical, under economic, environmental, aesthetic, and social constraints, to attain a desirable level of safety, mobility, and efficiency.
Once selected, all pertinent features of a road, such as curvature, superelevation, and sight distance, should be related to the design speed.

D. Traffic Composition

The physical characteristics of variously sized vehicles have a direct impact on geometric design. Vehicles are classified into three main categories: passenger cars, trucks, and buses/recreational vehicles, as well as fifteen subsets as listed in AASHTO's Policy on Geometric Design of Highways and Streets. Streets shall be designed such that the turning paths of these vehicles do not interfere with the physical constraints or other traffic of the street. The applicable category of vehicle to design is based upon the classification of the street.

3.03 TYPICAL CROSS SECTION ELEMENTS

A. Element Definitions

The elements which compose the cross section of a street should take into account the classification, design speed, traffic volume, traffic composition, and terrain of that street. The components which make up the cross section are the pavement type and cross slope, lane widths, shoulders, curbs, sidewalks, and if necessary a median. All of these components lend themselves together into determining the required right-of-way width.
Listed below are definitions of each of the elements within a cross section.

1) Right-of-way

See Section 1.00 "Definitions and Abbreviations".

Right-of-way shall be sufficient to accommodate the required roadway section, shoulder section, and median section where applicable.

All private roads as defined herein shall have a minimum of fifty (50) feet of right-of-way granted by the Subdivider/developer to each lot owner served by the road. The middle twenty (20) feet shall be improved with base, gravel and drainage structures.

No fixed or non-breakaway objects, as defined by NYSDOT, shall be permitted within the limits of the right-of-way.

2) Pavement Design and Cross Slope

A pavement design will be required for all collector and major roads. The pavement design shall be in accordance with these specifications. The pavement design and traffic analysis shall be signed and sealed by a NYPE. Pavement design shall be based on subgrade conditions, a 20 year design life and projected traffic loading. Subgrade conditions shall be based upon corrected soaked CBR values at 0.1 inch penetration per ASTM D1883. Soil samples used for these CBR tests shall be obtained at intervals not greater than 500 feet. Should an NYPE with expertise in geotechnical engineering certify that the soil in question is of the same type with similar engineering properties this spacing may be increased to a 700 foot maximum spacing. Boring logs and scaled drawings designating boring locations with CBR tests and other pertinent data shall accompany the pavement design.

Typically, a subdivision will require 2 to 3 soil samples as a part of the pavement design. Larger subdivisions, greater than 100 lots, may require additional soil samples at the discretion of the Town Engineer.

Approved pavement design methods include those most current as proposed by NYSDOT, AASHTO and the Asphalt Institute MS 1 document.

The AASHTO method will require use of a terminal serviceability index of 2.0 for collectors and 2.5 for thoroughfares, So = 0.49 for flexible pavement or So = 0.39 for rigid pavements, and a reliability of 98 percent for thoroughfares and 95 percent for collectors.

Rigid pavement design shall follow either the most current AASHTO Method or the Portland Cement Association Method.

All streets maintained by the NYSDOT must receive approval of the pavement design from the NYSDOT prior to the placement of curb and gutter or pavement material.

Normal crown for the pavement section shall be 1/4" per foot (2%).

3) Lane Widths

The minimum width of all roads shall be as specified in the Town of Erwin “Subdivision of Land”.

4) Shoulder Sections

Shoulders shall be sufficient to allow the adequate installation and maintenance of sidewalks and utilities, as well as provide sufficient clear distance as defined by NYSDOT.

Shoulder sections without a sidewalk shall be 10 feet wide on all streets with a cross section of 35 feet and greater.

Shoulders at least eight (8) feet wide shall be provided on both sides of collector roads. Minor roads shall have a shoulder at least eight (8) feet wide on one side and at least four (4) feet wide on the other.

Road shoulders shall not exceed a slope of ten percent (10%) at right angle to the road centerline.

5) Sidewalks

Sidewalks shall be constructed within the street right of way in accordance with these specifications. Sidewalks shall be installed at the time of roadway construction or widening unless otherwise approved by the Town Engineer. Sidewalks shall be required as follows:

a. Sidewalks at least four (4) feet wide may be required on both sides of all roads. Sidewalks maintained by the Town shall be a minimum of five (5) feet wide.

b. Sidewalks may also be required within pedestrian easements through blocks to provide a system of pedestrian walkways to school, parks, and other community facilities.

c. Sidewalks shall be two (2) feet from the property line inside the right-of-way, unless the adjacent road is a state or county highway, in which case the sidewalk shall be placed adjacent to and outside the right-of-way.

The minimum thickness of a sidewalk shall be 4 inches. A 6 inch depth is required at locations where a driveway crosses a sidewalk and at street intersections (along the length of radius curb returns) and a 6 inch depth is required in the handicap ramps. Sidewalks shall have a uniform slope toward the roadway of not less than 1/4 inch per foot nor greater than 1/2 inch per foot. The utility strip between the sidewalk and the back of curb shall not be less than 1/4 inch per foot nor greater than 1/2 inch per foot toward the roadway.

Where sidewalks and/or greenways intersect any section of curb and gutter, a wheelchair ramp shall be installed.

6) Median Sections

Raised median sections shall be a minimum of 16 feet wide measured from the back of curb to the back of curb to provide 12 feet for left-turning vehicles and 4 feet for the placement of signs and separation of traffic at median openings. It is desirable to have continuous median sections on thoroughfare roadways. In no case shall plantings within a median obstruct required sight distance.

Medians shall have sufficient crown prefer 1/2"/Ft to promote drainage off the median, but shall never be to a cross slope in which sight distance is obstructed.

7) Asphalt Paths

Location of asphalt paths shall be in keeping with the Town of Erwin Master Plan. Asphalt Path shall be used only when approved in writing by the Town. In situations where asphalt paths are proposed to run parallel with roadways they shall be offset a minimum of 12 feet from the back of curb. Asphalt paths will only be permitted parallel to roadways where there are a limited number of driveway and street crossings.

Asphalt paths shall be 1 1/2" Type 7F Top Course, 2 ½ Type 3 Binder underlain by 6" crushed gravel. Width and the inclusion of additional pavement design features shall be site specific.

3.04 GENERAL DESIGN ELEMENTS

The design of all streets shall meet the requirements of the Minimum Road Standards Table in Subdivision of Land Standards Section 4.3 page 19.

A. Horizontal Alignment Controls

AASHTO's, "A Policy on Geometric Design of Highways and Streets" shall be the design standard for roadways.

1) Superelevation

The rate of superelevation is controlled by several factors: climate (amount of snow and rain), terrain (rolling or level), location (urban or rural), and traffic composition (i.e. slow moving traffic). Given these factors it is concluded that no single maximum superelevation rate is universally applicable.

Generally it should be noted that superelevation rates of 0.04 and 0.06 are applicable to urban design, and superelevation may be omitted on low speed urban streets.

2) Tangent Lengths

A minimum tangent of 150 feet is required between reverse curves for minor and collector roads. This tangent shall be extended as necessary to provide the minimum runoff lengths for the curves superelevation per AASHTO guidelines. A 100 foot minimum tangent distance will be required between reverse curves for all minor streets. The minimum tangent length of an approaching intersection should be thirty (30) feet for residential streets. All intersections of streets classified as collector or greater shall have a tangent section not less than 100 feet approaching the intersection.

3) Spirals

Spirals are to be included in the design of minor roads and higher classified roads. The length of the spiral is to equal the length required for superelevation runoff. The length is to be based on the maximum relative gradients listed in AASHTO's, "A Policy on Geometric Design of Highways and Streets".

4) Curves

Curves are to be designed to establish the proper relation between design speed, superelevation, and side friction (developed between the road and tires). The maximum degree (or minimum radius) of curvature is a limiting value of curvature for a given design speed, superelevation rate, and side friction factors. Use of sharper curvature for a specified design speed would require superelevation or side friction factors beyond operational capacity and/or practicality.

Compound horizontal curves with the same direction of curvature shall have the radius of the flatter circular arc no more than one and one half times the radius of the sharper circular arc.

B. Vertical Alignment Controls

1) Grades

Street grades shall be established with respect to existing topography to avoid excessive grading and the removal of existing trees and vegetation whenever practical.

The minimum grade allowed on any street shall be one-half of one percent (0.5%).

The maximum grade allowed when approaching an intersection is five percent (5%) for the last 100 feet of pavement before the intersection.

2) Curves

Vertical curves affect the gradual change between grades of a vertical alignment. The curves should produce a design which is safe and comfortable for the driver, pleasing in appearance, and adequate for drainage.

Specifically, the design of vertical curves should focus on the particular concerns of both the crest and sag curves. The design of crest vertical curves should focus on providing sufficient sight distance. Crest vertical curves which are too abrupt in their curvature can impede the line of sight to drivers and thereby limit sight distance. The design of sag vertical curves should focus on rider comfort and drainage. Sag vertical curves which are too abrupt in their curvature can magnify the effects of the gravitational and vertical centrifugal forces acting on a rider. Sag curves which are too gradual can create substandard drainage conditions within the curve. The rate of vertical curvature is to insure that a minimum grade of 0.003 ft/ft is obtained within a 50' distance from the level point. In addition, sag vertical curves in cut situations should be avoided to prevent potential problems associated with the ponding of water.
The Town Engineer may approve street lighting which exceeds the standard Town of Erwin requirements for residential streets so as to reduce the length of sag vertical curves, provided the street lights are operational prior to the issuance of any Certificate of Occupancy on such street.

C. Sight Distance

1) General

Sight distance shall mean the length of roadway visible to the driver traveling along the roadway or waiting to enter or cross the roadway. Sight distance provides motorists the opportunity, traveling at design speeds, to prevent their vehicles in various situations from striking unexpected objects. Stopping sight distance and intersection sight distance are discussed in the following sections. Other topics related to sight distance, such as passing sight distance and decision sight distance, will be reviewed under AASHTO guidelines when the applicable situation arises.

The Town Engineer shall review all proposed development plans and landscaping planting plans for compliance with sight distance requirements. All new development within the Town limits shall meet these requirements.

Some objects located within sight distance areas may not significantly obstruct the required visibility of the driver. The driver may be able to see over, under or around some objects within sight distance areas. Objects that may be required within sight distance areas include fire hydrants, utility poles and traffic control devices which are located to minimize visual obstruction. Other objects 12 inches in diameter and smaller, such as tree trunks and sign posts, may be allowed within sight distance areas if located so as to not substantially restrict the driver's view. The Director of Development Services shall determine what objects, if any, may be located within sight distance areas. Trees greater than 12 inches in diameter and located in the right of way shall be evaluated in accordance with other applicable Town policies and requirements.

Some conditions may exist that prevent the attainment of desirable sight distance due to social, economic or environmental consideration. In such cases, the maximum practical sight distance shall be obtained. In addition, where desirable sight distance is not attained, additional measures such as warning signs, reduced speed zones and other traffic controls may be imposed. In all cases, unless otherwise provided by Code or granted an exemption from the Town Engineer, the minimum provision of adequate stopping sight distance shall be required.

The Town of Erwin shall remove sight distance obstructions located within Town of Erwin right of way. The Town of Erwin will notify the NYSDOT of sight distance obstructions located within their right of way. The Town of Erwin shall provide written notification to the owner(s) of private property on which a sight distance obstruction exists. The property owner(s) shall be responsible for the prompt removal of the obstruction on their property, and may be liable for any damage resulting from their failure to remove the obstruction.

2) Stopping Sight Distance

Stopping sight distance is the distance required of a driver to perceive, react, brake, and stop before reaching a conflicting object in its path. The required stopping sight distance is dependent upon the reaction time of the driver, the design speed of the vehicle, and the grade of the roadway. Stopping sight distances for both level and graded situations are listed below in Tables 3.1 and 3.2 respectively.

TABLE 3.1
Minimum Stopping Sight Distance
For Level Conditions and Wet Pavement

Design Speed (mph)	Stopping Sight Distance (ft)
10	45
15	75
20	125
25	150
30	200
35	250
40	325
45	400
50	475
55	550
60	650

Source: AASHTO A policy on Geometric Design of Highways and Streets, 1990.

TABLE 3.2
Adjustment Factors for Stopping
Sight Distance on Grades

Design Speed (m	Increase for Downgrades Correction i Stopping Sight Distance (Feet)			Decrease for Upgrades* Correction ir Stopping Sight Distance (Feet)		
	3%	6%	9%	3%	6%	9%
20	0	5	10	0	5	5
25	5	15	20	0	5	10
30	10	20	30	5	10	20
35	15	30	50	5	15	25
40	20	40	70	10	20	30
45	25	55	95	15	25	35
50	30	70	120	20	30	40
55	40	90	n/a	25	40	n/a
60	50	110	n/a	30	50	n/a

*Assumed speed is lower than the design speed since vehicles normally travel at a slower speed on an upgrade.

Source: AASHTO A policy on Geometric Design of Highways and Streets,1990.

Stopping sight distance is measured in the horizontal (plan) and vertical (profile) planes. In both planes, a driver must be offered an unobstructed line of sight to the roadway in front of them.

The horizontal stopping sight distance is measured along the middle of the travel lane from the driver to the object. The horizontal line of sight is a straight line connecting the driver's eye, which is located in the middle of the travelway, with the object, which is also located in the middle of the travelway. If this line of sight is impeded by any obstructions, either the obstruction should be moved or the alignment adjusted.

The vertical stopping sight distance is measured along the middle of the travel lane from the driver to the object. The vertical line of sight is a straight line connecting the driver's eye, which is located 3.5 feet above the roadway surface, with the object, which is located 0.5 feet above the roadway surface. If this line of sight is impeded by any obstructions, either the obstruction should be moved or the alignment adjusted.

3) Intersection Sight Distance

Unlike stopping sight distance, which represents an absolute minimum applicable to all driving scenarios, intersection sight distance is only applicable at the intersection of two streets or the intersection of a street and driveway. At all intersections, there is a minor street or movement (whose approach is controlled by some device like a sign), and a major street or movement (whose approach may not be controlled). Intersection sight distance is the distance required of a driver on the minor street to react and safely cross or join the major street traffic, while not requiring the major street traffic to reduce its speed or alter its path.

In addition, intersection sight distance is based on conflicts with opposing vehicles rather than with objects located in the roadway.
Intersection sight distance is measured in the horizontal (plan) and vertical (profile) planes. In both situations, a driver must be offered an unobstructed line of sight to the roadway they wish to cross or join. The horizontal intersection sight distance is measured along the centerline of the major street between the drivers of the two opposing vehicles.

The horizontal line of sight is a visual line connecting the driver's eye and the approaching vehicle, both of which are in the center of the travelway. If this line of sight is impeded by any obstructions, either the obstruction should be moved or the alignment adjusted. The vertical stopping sight distance is measured along the centerline of the major street between the drivers of the two opposing vehicles. The vertical line of sight is a visual line connecting the driver's eye, which is located 3.5 feet above the roadway surface, with the approaching vehicle, which is located 4.25 feet above the roadway surface. If this line of sight is impeded by any obstructions, either the obstruction should be moved or the alignment adjusted.

The amount of sight distance required at an intersection depends on the type of traffic control at the intersection and the speeds of the vehicles. All controls shall be per AASHTO Standards.

a. Yield Sign Control

This type of design requires that the side street be posted with yield signs. The sight distance for the driver on the side street (minor movement) must be sufficient for the driver to observe a vehicle on the through street (major movement) approaching from either the left or the right and bring his/her vehicle to a stop prior to reaching the intersection.

Where proper sight distance cannot be achieved for the driver on the side street, it may be necessary to have a posted speed reduction on the approach or to replace the yield sign with a stop sign. Adequate sight distance shall also be provided for safe departure from a stopped condition.

b. Stop Sign Control

Where traffic is required to stop, the driver of the stopped vehicle shall have adequate sight distance to cross or join the approaching traffic flow without adversely affecting the travel speed of the approaching traffic.
There are three basic maneuvers that occur at stop controlled intersections:

To travel across the intersecting roadway by clearing traffic on both the left and the right of the crossing vehicle;

To turn left into the crossing roadway by first clearing the traffic on the left and then entering the traffic stream with vehicles from the right (this maneuver is similar in nature to that made by the median left turns off the through street); and

To turn right into the intersecting roadway by entering the traffic stream with vehicles from the left.

Where the through street is undivided, or divided with a median narrower than 20 feet, maneuvers I and II are treated as a single operation. Where the median can provide storage for the design vehicle (20 feet wide for a passenger car), maneuvers I and II may be considered in two separate phases of operation.

The measurement method for determining the sight line for left, right, and through movements from the side street is based on values listed in Table 3.3 below.

TABLE 3.3
Intersection Sight Distance for
Stop Sign and Traffic Signal Controlled
Intersections (right on red movements)

Operating Speed (mph)	Minimum Intersection Sight Distance (ft)
20	230
25	300
30	380
35	470
40	575
45	700
50	845
55	990
60	1,150

Source: AASHTO, A Policy on the Geometric Design of Streets and Highways, 1990.

The measurement method for determining the sight line for left turns from the median lane of the through street is based on values listed in Table 3.4 below. The values in Table 3.4 give the minimum sight distance for movement across one, two, or three lanes.

TABLE 3.4
Minimum Sight Distance for
Left Turn from Through Street

Operating Speed (mph)	Minimum Left Turn Sight Distance (feet)		
	1 lane	2 lanes	3 lanes
20	180	200	220
25	230	250	275
30	280	300	330
35	320	350	385
40	370	400	440
45	420	450	500
50	470	500	550
55	550	550	610
60	650	650	670

Source: AASHTO, A Policy on the Geometric Design of Streets and Highways, 1990.

c. Traffic Signal Control

At intersections controlled by traffic signals, the minimum sight distance will be stopping sight distance (Tables 3.1 and 3.2) for all side street movements except for the right turn movement. The right turn movement shall have intersection sight distance to allow right turn on red, except where it is economically impractical due to existing major features such as permanent buildings and large mature trees. The minimum sight distance for the right turn movement limited by existing major features shall be stopping sight distance. Where intersection sight distance cannot be achieved, right turn on red will be restricted.

D. Traffic Control

1) Traffic Signs, Pavement Markings, and Street Name Signs

Traffic signs and pavement markings shall be marked in accordance with the latest revision of the MUTCD unless otherwise approved by the Town Engineer. A pavement marking plan showing description and placement of traffic signs, pavement markings, and specialty signs shall be submitted with all roadway and subdivision plans as a requirement of the Developer, and shall be done prior to issuance of final acceptance of the roadway by the Town.

The pavement markings shall be waterbourne paint unless otherwise required by the Town. In areas of high traffic the Town may require the use of thermoplastic in accordance with NYSDOT standards.

The Town Board of the Town of Erwin must, by law, approve street names and may change any name chosen by the Owner to avoid duplication or for any other reason of its own. The use of proper names is discouraged.
Traffic Control and Street Name Signs within subdivisions which will be maintained by the Town of Erwin shall be consistent with the MUTCD. All specialty traffic control and street name signs and posts must comply with Town of Erwin Standards.

2) Traffic Signals

The design, installation and construction of traffic signals shall meet the specifications put forth by NYSDOT's Traffic Engineering. Special attention shall be given to the areas of these specifications regarding metal poles and preemption control. All control equipment shall be programmed.

a) Metal Poles

Metal poles with mast arms shall be employed at intersections where utilities are underground. All other locations will be decided on a case by case basis. Where applicable, consideration should be given to standard designs of metal poles and mast arms and footings as approved by NYSDOT.

b) Preemption Control

Emergency vehicle-initiated preemption of traffic signals on the State Highway System must be approved by NYSDOT. Official first response emergency vehicles that utilize sirens and red flashing lights to provide services to the public which prevent loss of life and property are the only eligible vehicles. "Official" vehicles are fire-fighting and emergency medical services vehicles owned, operated and maintained by the emergency response agency or authority.

Police vehicles may have access to the preemption system on state maintained roadways only after approval by NYSDOT. All preemption equipment must be NYSDOT approved.

3) Traffic Control Devices

The Town will not allow the obstruction of any public street, private street or fire lane unless otherwise stipulated by the Town of Erwin. This requirement shall include parking, speed bumps or any other device which may obstruct the free passage of emergency vehicles.

All traffic control devices allowed outside the above restrictions must be shown and approved as a part of a site plan prior to installation and must be in conformance with the Specifications. The traffic control devices and all related signs and pavement markings shall be maintained by the Town of Erwin. Traffic control devices may include rumble strips, raised pavement markers, pavement undulations (speed humps), or speed bumps.

a) Rumble Strip

An irregular surface established to draw the attention of motorists and alert them of potential hazards or conflicts. The material used as a part of a rumble strip may be cobblestone, stamped concrete, brick or rough surface asphalt. A rumble strip may not vary more than one (1) inch in height from the pavement elevation. All rumble strips must be located outside any public right of way.

b) Raised Pavement Markers

Raised pavement markers may be used to create an irregular surface to draw the attention of motorists and to alert them of potential hazards or conflicts. The markers must be made of a flexible and durable solid material designed to support vehicular traffic. The placement of markers may be staggered in a manner as approved by the

Director of Development Services. All raised pavement markers shall have a maximum height of 1 inch above the pavement surface. The minimum size of the marker shall be 4 inches by 4 inches. The markers must be located outside any public right of way. All raised pavement markers shall have cube-corner microprism reflectors visible from either direction of travel.

c) Pavement Undulation (Speed Hump)

A pavement undulation is a gradual raised pavement surface which transverses the travelway. The surface material for a pavement undulation shall be the same as the adjacent travelway, typically asphalt.

A pavement undulation shall be parabolic with a maximum height of 3 inches. The undulation shall be tapered to the edge of the pavement or gutter line for the last 12 inches along each side. The minimum length of the pavement undulation shall be 12 feet.

All pavement undulations shall be clearly marked with pavement markings and warning signs for each direction of travel.

Pavement undulations must be located a minimum distance of 500 feet from a signalized intersection. The Town and/or NYSDOT may require the removal of any speed undulation which causes traffic to back up onto a public street.

d) Pedestrian Crossings

All locations which are designated for pedestrian traffic crossings shall be designated as a crosswalk with pavement markings and signage. The type and placement of signage and markings shall be consistent with MUTCD. Pedestrian crossings should be placed at traffic controlled approaches to intersections and included in the phasing. All pedestrian crossings must be approved by the Town Engineer.

4) Lane Configuration

Tapers shall be used as necessary in street design. Approach tapers are used to shift lanes laterally. The following equations shall be used as applicable:
L = WS for posted speeds of 45 mph and greater;
L = WS2⁄60 for posted speeds of 40 mph or less;
Where: L = Length in feet
S = Speed in miles per hour
W = Lateral offsets in feet.

5) Construction Zone Traffic Control
See section 2.06, "Maintenance and Protection of Traffic".

E. Traffic Analyses

All traffic analyses shall be completed and bear the seal of a NYPE.

F. Structure Design

1) A structure less than 20 feet long shall be considered a culvert.

2) A structure 20’ long or greater shall be considered a bridge.

All public or private bridges shall be designed to withstand HS-20 highway loading unless otherwise approved by the Town Engineer and shall be properly signed and sealed by a NYPE.

3.05 SPECIFIC DESIGN ELEMENTS

A. Intersections

1) Alignment

Streets shall intersect each other at right angles whenever possible. The minimum desirable intersection angle is 80 degrees. At no time shall a street intersect any other street at less than 75 degrees.

2) Spacing

Intersections of major roads shall be held to a minimum and spaced at least one thousand (1000) feet apart. Intersections of collector roads by other roads shall be a t least eight hundred (800) feet apart. Cross (four-cornered) road intersections shall be avoided insofar as possible, except at intersections where both roads are at least of collector designation. Between offset intersections there shall be a distance of at least one hundred fifty (150) feet.
Within fifty (50) feet of an intersection, roads shall be approximately at right angles and in no case shall the angle of intersection by less than seventy-five (75) degrees without additional channelization.

Minimum curb radius shall depend on the intersecting road types and shall be as follows:

Collector with collector:	35’
Minor with collector:	30’
Minor with minor:	25’
Collector or minor roads into the subdivision from a major road:	40’

All property corners at road intersections shall be rounded with a radius of twenty (20) feet or have comparable cutoffs or chords. Within triangular areas formed by the intersecting road lines, for a distance of seventy-five (75) feet from their intersection and the diagonals connecting the end points of these lines, visibility for traffic safety shall be provided by exclusions of planting or structures.

Grades within the intersection shall not exceed one and one-half percent (1.5%) for a distance of fifty (50) feet from the intersection. From fifty (50) to one hundred (100) feet, the grades shall not exceed three percent (3%). In no case shall the grades exceed five percent (5%).

Triangles, circles or other traffic channeling islands may be required at intersections where present or anticipated traffic conditions indicate their advisability for traffic control or safety.

Median breaks shall be provided to allow safe and efficient movement of traffic. The desirable spacing of median breaks shall be at 1000’ intervals, with the minimum allowable spacing to be at 500’ intervals.

B. Driveways

1) Driveway permits shall be required. The Town Highway Department shall be notified one (1) week prior to asphalt work or concrete work on new driveways.

2) The Town Highway Department shall determine whether or not it will be necessary to provide a facility for conducting storm water across driveways.

3) Where a new or replacement culvert pipe is required within the Town right of way, the **Town Highway Superintendent will specify** type and size and will install. The pipe is to be furnished and paid for by the Contractor/Owner.

4) All portions of the driveway within the Town's right of way shall have a minimum section of 2-inch Type 7F Top Course, 4-inches of Type 3 Binder and one (1) ft of gravel subbase. Contractor/Owner shall seal joint between new driveway and existing Town Road if applicable.

5) The Town of Erwin Highway Department shall determine whether or not it will be necessary to provide a facility for conducting storm water across driveways. Where a culvert pipe is required the Town Highway Department will specify type (Double wall Type S Corrugated High Density Polyethylene pipe (HDPE) with a smooth interior meeting all requirements of AASHTO M294 minimum) and size of the pipe. The pipe is to be furnished and paid for by the Owner. Maintenance of the pipe shall be the responsibility of the Owner. The Town of Erwin Highway Department shall be notified one (1) week prior to asphalt or concrete work on a new driveway.

6) No person, firm, or corporation shall construct or locate any driveway entrance or exit into a highway of the Town of Erwin without having first met the provisions of this section. The "Standard Entrance and Exit Crossing Requirements" shall be as follows:

a) The applicant shall furnish all materials and bear all costs of construction within the Town road right-of-way; as required to meet the conditions set by the Town Highway Superintendent.

b) No alteration or addition shall be made to any driveway without first securing permission from the Town Highway Superintendent.

c) No more than two (2) driveways to a single commercial establishment entering on one (1) highway shall be permitted.

d) No alteration or addition shall be made to any driveway without first securing permission from the Town Highway Superintendent.

e) No more than one (1) driveway to a one (1) unit detached dwelling shall be permitted.

f) The maximum width for a single combined entrance or exit shall be not more than 30 feet for commercial use and not more than 20 feet for residential use.

g) Drives shall maintain a minimum of thirty (30) feet between such driveways or curb cuts twenty five (25) feet of the intersection of two (2) public rights of way.

h) No driveway shall be permitted within twenty five (25) feet of two (2) public rights of way.

i) A minimum clear vision distance of 250 feet shall be available in each direction or as required by NYSDOT standards, whichever is greater.

j) The slope of the driveway shall in general not be greater than 10%. Slope of the driveway shall provide satisfactory and safe access to the intersecting highway. The slope of the driveway shall not exceed two percent (2%) within twenty five (25) feet of the intersecting public highway

k) Driveways shall be constructed with a suitable crown so as to lessen the erosion effect of surface runoff. In addition, as specified by the Town Highway Superintendent a catch basin as a point near the intersection of the driveway and town highway may be required to prevent surface water and debris from being discharged onto the same.

l) Driveways in B1, B2, B3, MU, TC, and RS districts shall conform to the design standards set forth in Section 130-89 Design Standards for Selected Districts of the Town of Erwin Zoning Ordinance.

m) Driveway profiles shall show maximum grades into the intersection with the road.

C. Parking Lots

1) Parking lots shall be designed to provide safe maneuverability of vehicles. A minimum parking stall dimension of 9 by 18 feet shall be provided. Handicap parking spaces and access isles shall be provided in accordance with the current Americans with Disabilities Act guidelines. All parking facilities shall have dimensions as outlined in the Town Parking Ordinance. The measurement of said dimensions shall be to the front edge of curb and gutter at the edge of pavement, unless a curb stop is employed in which case that will serve as the end of measurement.\

2) At locations where sidewalk abuts a parking bay which is 18 feet deep, the sidewalk shall be a minimum width of 6 feet. In parking lots where end islands are required, reference to Standard Detail is recommended.

3) A minimum pavement structure consisting of 12 inches of granular stone and 4 inches of asphalt shall be used in the travel aisles and stalls on parking facilities for multi-family (excluding duplex and triplex) developments, and non-residential developments. Access drives for these facilities shall also meet this minimum pavement standard.

4) All paved parking facilities shall be striped in accordance with the MUTCD with 4 inch white lines.

5) On all parking lot facilities, cut and fill slopes shall not begin immediately at the back of curb, instead a minimum 4’ shoulder is required behind the back of curb.

D. Fire Lanes

1) Fire Lanes shall be installed and inspected in accordance with the public street requirements and the fire code. The Fire Official shall have the authority to designate fire lanes as deemed necessary for Fire Department access. The requirements for installation of a fire lane shall be subject to the fire code.

2) Fire lanes shall be a minimum width of 20 feet and shall be properly marked and signed to designate the access as a "fire lane" as specified by the Fire Marshal. The surface of the fire lane shall be paved with a minimum of 12 inches of granular stone and 4 inches of asphalt.

3) All fire lanes shall be marked in accordance with one of the following requirements:

a) Continuously marked with thermoplastic yellow striping along the fire lane with "No Parking Fire Lane" printed with minimum 8 inch high letters at 40 foot intervals or as directed by the Gang Mills Fire Department.

b) Continuously marked with thermoplastic yellow curb with "No Parking - Fire Lane" along the fire lane with "No Parking - Fire Lane" printed with minimum 8 inch high letters at 40 foot intervals or as directed by the Gang Mills Fire Department.

c) The installation of the MUTCD standard sign showing "No Parking - Fire Lane" placed at each end of the fire lane and at 50 foot intervals with arrows on the signs or a continuously painted yellow strip along the designated fire lane.

3.06 MATERIALS

A. Concrete

1) Portland cement concrete for curb and gutter, driveways, and sidewalks shall have a minimum 28 day compressive strength of 3000 psi, a non-vibrated slump between 2.5 and 4 inches, a minimum cement content of 564 pounds per cubic yards, an air entrainment of between 5% and 7%, and a maximum water-cement ratio of 0.532. Joint filler shall be a non-extruding joint material conforming to ASTM C1751.

2) Concrete Curing Agents shall be free from any impurities which may be detrimental to the concrete and meet Section 500 of the NYSDOT Specifications.

3) Aggregate for portland cement concrete shall meet the requirements for fine and course aggregate of Section 500 of the NYSDOT Specifications.

4) Portland Cement and admixtures shall meet the requirements of Section 500 of the NYSDOT Specifications.

5) Water for mixing or curing the concrete shall be free from injurious amounts of oil, salt acid, or other products injurious to the finished product.

6) Concrete Pavement shall meet the general, material, and construction specifications of Section 700 of the NYSDOT Standards.

B. Bituminous Material

1) Aggregate Base Course shall consist of coarse aggregate produced in accordance with Section 403 of the NYSDOT Specifications for aggregates.

2) Bituminous Surface Course, Type 7, shall consist of a mixture of coarse and fine aggregates, asphalt cement, and shall meet the requirements in Section 403 of the NYSDOT Specifications.

3) Bituminous Concrete Base Course, Type 1, shall conform to the general, material, and construction specifications of Section 403 and Section 703 of the NYSDOT Specifications.

4) Bituminous Concrete Binder Course, Type 3, shall conform to the general, material, and construction specifications of Section 403 of the NYSDOT Specifications.

C. Tack Coat

1) Tack Coat shall be asphalt or asphalt cement and shall meet the general, material, and construction specifications of Section 407 of NYSDOT Specifications.

D. Geotextile Fabric

1) Geotextile Fabric shall be used to stabilize roadways, subgrades, slopes, and for other uses as necessary. The material must be approved by the Town Engineer prior to installation. Areas stabilized with fabric shall be indicated on "as-built" drawings with the manufacturer name and type fabric indicated.

3.07 CONSTRUCTION AND INSPECTION

A. Streets

No base material shall be placed on a roadway until the storm sewer, subgrade, utilities, and all appurtenances have been inspected and approved by the Inspector and/ or Town Engineer.

The Town may require field density testing of the subgrade soils by a certified testing firm. The firm shall perform sufficient Proctors to evaluate the compaction characteristics of various soils used in the roadbed. The Town may also require field density testing of the subbase material used and an asphalt mix formula before either is inspected or approved.

The subgrade shall be compacted. Inspection of the subgrade prior to placement of base course, and inspection of the base course prior to placement of asphalt shall be performed by proofrolling and/or field density testing at the direction of the Town Engineer.

B. Curb and Gutter, and Sidewalks

1) No concrete shall be placed until the forms and subgrades have been approved by the Inspector.

2) The surface of sidewalks shall be finished to grade and cross section with a float, trowelled smooth and finished with a broom. Sidewalks must be satisfactorily installed before issuance of a Certificate of Occupancy.

a) Subgrade shall be excavated to the required depth, and shaped to the proper cross-section. Where tree roots are encountered, they shall be removed to a depth of 1 foot for the full width of the excavation. The subgrade shall be stable and thoroughly compacted.

b) Forms shall be set and maintained true to the required lines, grades, and dimensions. Forms shall be constructed with material of such strength and rigidity to prevent any appreciable deflection between supports. Straight forms shall be within a tolerance of 1/2 inch in 10 feet from a true line horizontally or vertically. Forms shall be thoroughly cleaned of all dirt, mortar and foreign material before being used. All inside form surfaces shall be thoroughly coated with commercial quality form oil.

c) Grooved Contraction Joints shall be cut to a depth equal to at least 1/3 of the total slab thickness. The joint shall be no less than 1/8 inch in width and cut at intervals equal to the width of the sidewalk.

d) Expansion Joints shall be a 1/2 inch joint filled with joint filler and placed between all rigid objects and placed no farther than 50 feet apart for sidewalks and curb and gutter, extending the full depth of the concrete with top of the filler 1/2 inch below the finished surface.

SECTION 4.00

SOIL EROSION, SEDIMENTATION CONTROL, AND LANDSCAPING

1.01. SCHEDULING

Temporary and permanent erosion control measures shall be provided for all land disturbing work in accordance with an erosion control plan approved by the Town. A site plan approval shall be obtained from the Town Planning Board prior to beginning site work. A site plan shall be submitted to the Planning Board prior to the beginning of the site work. Temporary measures shall be installed and inspected by the Town Engineer for compliance prior to any land disturbing activity. All permanent erosion control measures shall be incorporated into the work at the earliest practical time. All temporary measures shall be maintained until the permanent measures have taken effect or approved by the Town Engineer. Temporary and permanent measures shall be coordinated to provide effective and continuous erosion control throughout the construction and post-construction period to minimize siltation of streams, lakes, reservoirs, and other impoundments, ground surfaces, and other property. These measures shall remain in effect until Final Approval is given by the Town of Erwin.

1.02. TEMPORARY MEASURES

A. Soil Erosion and Sedimentation Control

1) Silt Fence shall be installed in accordance with the details at the toe of all fill slopes and any other necessary locations as directed by the Town and in accordance with the NYSDEC Standards.

2) Diversion Ditches shall be installed in accordance with the details at the top of cut and fill slopes and any other necessary locations as necessary to direct stormwater runoff from drainage area away from Construction disturbance.

3) Construction Entrances shall be installed at all points of access to construction sites in accordance with NYSDEC Standards. Any access point which does not have a construction entrance shall be barricaded to prevent its use.

4) Sediment Pits or Filter Basins shall be installed in accordance with the details at all points where accumulated runoff is released to natural drainage channels, and any other necessary locations as directed by the Town. Sediment pits and filter basins shall be sized to hold 1800 cubic feet of sediment for every acre of denuded area tributary to the structure.

5) Temporary Seeding is the use of rapid growing annual grasses, small grains or legumes to provide initial, temporary cover for erosion control on disturbed areas for less than 12 months. Seed bed preparations and soil amendments shall be in accordance with the method described under "Seeding and Mulching".

6) Seeding and Mulching shall be done immediately following construction. All disturbed areas shall be dressed to a depth of 8 inches. The top 4inches shall be topsoil providing a uniform seedbed.

7) On projects that will be maintained by the Town, verification of soil amendments and seeding rates may be required, and changes to these rates may be requested by the Town during the plan review process. Reuse of topsoil and/or other measures to assure final soil conditions are conducive to rapid establishment of vegetation cover is required.

8) 5-10-10 fertilizer shall be applied to all disturbed areas at a rate of 21 lb./1000 sq. ft., and mulching shall consist of small grain straw applied at a rate of 70 lb./1000 sq. ft. If active construction ceases, meaning no substantial or significant progress is made in any area for more than 20 days, all disturbed areas must be seeded, mulched, and tacked unless written approval is granted by the Town Engineer. Incidental grading shall not constitute substantial or significant progress in construction activity.

1.03. PERMANENT MEASURES

A. Ground Cover – the establishment of perennial vegetation cover for periods longer than 12 months.

1) All disturbed areas shall receive a permanent ground cover. Permanent seeding and temporary seeding differ shall only in the type of seed to be used (i.e. annual versus perennial). Seed bed preparations and soil amendments shall be similar for temporary and permanent seeding.

B. Riprap Protection

1) All stormwater release points shall be protected by riprap dissipation pads designed to reduce discharge velocities to non-erosive levels. Dissipation pads shall be designed and constructed with either an engineering fabric or washed stone barrier between the pad and the natural ground. Calculations shall be furnished to indicate the sufficiency of the dissipation pads specified. Riprap pad design shall be in accordance with NYDOT or NYSDEC Standards. Filter fabric, or a washed stone liner, shall be used on all sediment basins, riprap dissipaters, and channels.

1.04. COMPUTATIONS

All computations and assumptions used to formulate an erosion control plan shall be reviewed by the Town Engineer. Erosion and sedimentation control measures, structures, and devices shall be planned, designed, and constructed to control the calculated peak runoff from a 10-year frequency storm. Runoff rates shall be calculated using the USDA Soil Conservation Service Method, the Rational Method, or other acceptable calculation procedures. Runoff computations shall be based on rainfall data published by the National Weather Service for this area.

1.05. CONSTRUCTION SEQUENCE

A. The construction sequence on projects shall be as follows:

1) Obtain Site Plan Approval.

2) Obtain permit from Town Code Enforcement Officer.

3) Install all approved erosion control measures.

4) Proceed with grading.

5) Routinely clean structures designed to trap and remove sediment from stormwater.

6) Seed and mulch denuded area within 7 days after finished grades are established.

7) Maintain soil erosion control measures until permanent ground cover is established over 80% of disturbed areas.

8) Remove soil erosion control measures and stabilize these areas.

SECTION 5.00

PIPE TRENCHES

5.01. EXCAVATION AND PREPARATION

The minimum trench width at the top of the pipe shall be at least 18 inches greater than the outside diameter of the pipe. Rock shall be removed to a depth of at least 6 inches below the bottom of the pipe and the trench backfilled with suitable granular material. The bottom of the trench shall be shaped to provide uniform support along the length of the pipe, and a space shall be excavated at each bell.

All excavation within pavement shall require saw cut of pavement prior to commencement of excavation.

5.02. PIPE LAYING AND BACKFILLING

Open ends of pipe shall be plugged when pipe laying is not in progress to prevent trench water, soil, and debris from entering. Backfill material shall be free from construction material, frozen material, organic material, or unstable material, and shall be placed and compacted. All trenches along roadways shall be properly backfilled at the end of each working day.

5.03. PAVEMENT REPAIR

All pavement cuts shall be repaired within a maximum of three (3) days from the date the cut is made and documentation of proper compaction is provided. If conditions do not permit a permanent repair within the given time limit, permission to make a temporary repair must be obtained from the Town of Erwin Highway Superintendent. Pavement repairs shall be in accordance with the Details. A permit to cut Town roads shall be obtained prior to the start of work.

All asphalt repairs shall include tack coat of all cut edges and crack seal all seams.

5.04. TUNNELING

All utility crossings within Town of Erwin streets shall be by boring and jacking or directional drilling. In cases where utility conflicts, rock, or other obstructions prevent crossing by tunneling, the Town of Erwin may consider approving other methods.

Bores larger than 6" must use casing pipe. Encasement pipe shall be manufactured of grade 'B' steel with a minimum yield strength of 35,000 psi in accordance with ASTM A139 and A283. When used within NYSDOT right-of-way, the encasement pipe shall meet NYSDOT requirements.

If voids are encountered while installing encasement pipe thirty (30) inches and larger, grout holes shall be installed as necessary and filled with 1:3 Portland cement grout at sufficient pressure to prevent settlement of the roadway, unless NYSDOT approval stipulates otherwise. Other grout mixtures may be submitted for approval.

In the event that an obstruction is encountered during boring and jacking, the pipe is to be cut off, capped, and filled with 1:3 portland cement grout at a sufficient pressure to fill all voids before moving to another boring site.

Size and wall thickness of smooth wall or spiral welded encasement pipe shall be as follows:

Pipe Size (O.D.)	Wall Thickness (in)
12 3/4”	0.188
16”	0.250
18”	0.250
20”	0.250
24”	0.250
30”	0.312
36”	0.375

Casing pipe shall be installed with a minimum cover of 3 feet under pavement.

All carrier pipe shall be slip joint ductile iron pipe resting on steel spiders, treated timber skids or other approved spacer to prevent damage to the pipe bells, which shall not contact the interior of the casing pipe. The spacing interval of the aforementioned spacers shall be the minimum number needed to assure necessary grade, clearance, and support. No blocks or spacers shall be wedged between the pipe and the top of the casing. Casing pipe shall have the following minimum sizes:

Carrier Pipe Size (in)	Casing Pipe Size (in)
4	12 3/4
6	12 3/4
8	18
10	20
12	24
14	26
16	28

5.05. DIRECTIONAL DRILLING

A. Materials

1) Pipe

Pipe and fittings shall meet the requirements of AWWA/ANSI C151/A21.51 and ANSI/AWWA C153/A21.53, respectively. Pipe used for directional drilling shall be Class 350 ductile iron pipe, or as specified by the engineer, with pipe manufacturer designed restrained flexible joints and smoothly contoured bells. Joints with bulky glands or flanges that may prevent the smooth flow of the drilling fluid/soil slurry over the joint shall not be acceptable.

2) Drilling fluid

Drilling fluid shall be composed of liquid bentonite clay slurry. Fluid shall be totally inert with no environmental risk.

B. Execution

1) Work site be graded or filled to provide a level working area. No alterations beyond what is required for operations are to be made.

2) Entire drill path shall be accurately surveyed with entry and exit stakes placed in the appropriate locations within the areas indicated on drawings. If a magnetic guidance

system is being used, a drill path shall be surveyed for any surface geomagnetic variations or anomalies. Operations shall comply with all applicable state, federal and local safety regulations and shall be conducted in a safe manner.

3) Pipe lengths shall be connected together in one length, if space permits. Pipe shall be placed on pipe rollers before pulling into bore hole with rollers spaced close enough to prevent excessive sagging of pipe. Pilot hold shall be drilled on bore path with no deviations greater that 5% of depth over a length of 100 feet. In the event that pilot does deviate from bore path more than 5% of depth in 100', it may be required to pull-back and re-drill from the location along bore path before the deviation.

4) Upon successful completion of pilot hole, the bore hole shall be reamed to a minimum of 25% greater than outside diameter of pipe bell for straight pulls and 50% greater for curved or radius pulls using the appropriate tools.

5) After successfully reaming bore hole to the required diameter, the pipe shall be pulled through the bore hole. In front of the pipe shall be a swivel. Once pull-back operations have commenced, operations must continue without interruption until pipe is completely pulled into bore hole. During pull-back operations not more that the maximum safe pipe pull force shall be applied at any time.

6) Excess pipe shall be removed and the bore hole associated with this excess pipe shall be filled with flowable fill or grout unless the area of the excess pipe is excavated and backfilled as part of the tie-in operations.

7) A concrete anchor wall shall be provided at the transition of pipe materials (i.e. HDPE-Ductile) when a directional drill is completed using HDPE or PVC and the length is equal to or greater than 100 ft. The anchor wall shall be constructed according to the anchor wall detail provided in these specifications.

C. Pipe Testing

1) Following successful pullback of pipe, the pipe shall be hydro-tested.

SECTION 6.00

WATER DISTRIBUTION

6.01 WATER DISTRIBUTION PIPE

A. System Design

1) Location

Water lines shall be extended along the roadway to the adjacent property line. All public water main shall be located within dedicated right of way or dedicated easements with a minimum width of 20 feet unless otherwise approved by the Town.

All watermain located within the NYSDOT right or way shall be placed in accordance with NYSDOT standards.

2) Sizing

Sizing calculations of all watermain shall be approved by the Town Engineer.

3) Installation

All necessary permits must be obtained prior to construction.

All water mains shall have a minimum cover of **5 feet** measured from the top of the pipe to the finished grade. When water lines are installed along a roadway which does not have curb and gutter, the water line shall be installed at sufficient depth to prevent conflict with future road improvements or vertical alignment changes.

4) Relation to Sanitary and Storm Sewers

Water mains shall be installed with a minimum horizontal distance of at least 10 feet from existing or proposed sanitary or storm sewers, measured laterally edge to edge, unless the elevation of the bottom of the water main is at least 18 inches above the top of the sewer with a horizontal separation of at least 3 feet.

Where a water main and a sanitary sewer cross, and the vertical separation is less than 18 inches or the water line passes under the sanitary sewer, the entire leg of the sewer line shall be ductile iron pipe equivalent to water main standards.

Water mains should only cross sanitary sewer mains at an approximate 90 degree angle.

Water mains and storm sewer mains shall have a minimum vertical separation of 18 inches and a lateral minimum distance of 10 feet unless otherwise approved by the Town Engineer and the NYSDOH.

Joints shall be arranged so that joints are equidistant and as far as possible from the crossing.

B. Pipe Design Material

1) Material

All water main distribution pipe shall be cement lined ductile iron made in the United States.

2) Ductile Iron Pipe

Ductile iron pipe shall be designed and manufactured in accordance with AWWA C150 and C151 for a laying condition Type 2 and a working pressure as follows:

Water Main Size	Pressure Rating	Wall Thickness Class
3”-12”	350 psi	52
14”-20”	250 psi	52
24”	200 psi	52
30”-54”	150 psi	52

All ductile iron pipe shall have a minimum wall thickness class of 50 (i.e. CL50).

Pipe joints shall be of the push-on type as per AWWA C111. Pipe lining shall be cement mortar with an external coat of bituminous material in accordance with AWWA C104. Galvanized steel pipe will not be allowed as a material for water mains or water service lines.

3) Directional Drill HDPE

6.02 FIRE PROTECTION

A. Fire Hydrants

1) Location

All fire hydrants shall be factory red in color. No field painting is acceptable.

All fire hydrants shall be installed on a minimum 6 inch water line with a 6 inch lateral. Only one fire hydrant may be installed when the line is served by a 6 inch tap. There shall be at least one fire hydrant at each street intersection. The minimum acceptable flow for fire hydrants is 1000 gallons per minute (gpm) in residential areas and 1500 gpm in other districts unless additional fire flow is required to meet anticipated existing Insurance Services office (ISO) requirements. Valves associated with fire hydrant assemblies shall be located within 5 feet of the fire hydrant unless otherwise approved by the Town or its representative.

In residential districts the maximum distance between hydrants, measured along street centerlines, shall be 500 feet. When residential intersections are less than 700 feet apart, a hydrant is required between the intersections.

In business, office and institutional, and industrial zoning the maximum distance between hydrants, measured along street centerline, shall be 300 feet. When business, office and

institutional, and industrial intersections are less than 450 feet apart, a hydrant is not required between intersections

On major thoroughfares and collector streets with access points only at street intersections, hydrants shall be located at each street intersection and at 1000 foot intervals along the street. Where these intersections are less than 1200 feet apart, no hydrant is required between the intersections. Fire hydrants shall be placed in a staggered arrangement on both sides of any roadway classified as a major or minor thoroughfare with the hydrant spacing as referenced above. New buildings, or additions which result in a total building area of 10,000 square feet, require hydrants to be installed at 300 foot intervals along all sides of the building that are accessible to fire pumpers. These hydrants shall be at least 40 feet away from the building. The total number of hydrants shall not exceed one hydrant per separation of buildings plus one hydrant per 10,000 square feet of floor space. Fire hydrants located on private property shall be protected by a NYSDOH backflow prevention device complying with the Town's cross connection control requirements.

2) Specifications

Hydrants shall conform to AWWA C502 with a minimum valve opening of 4 1/2 inches. Hydrants shall be furnished with one steamer and two hose connections with caps and chains, National Standard Threads, mechanical joint, 1 1/2 inch pentagon operating nut, open left, painted fire hydrant red, bronze to bronze seating, a minimum 4 foot bury depth with a break away ground line flange and break away rod coupling. The hydrant bonnet will be designed with a sealed oil or grease reservoir with O-ring seals and a Teflon thrust bearing. Fire hydrant caps shall be attached to the body of the hydrant with a minimum 2/0 twist link, heavy duty, non-kinking, machine chain. The Town has standardized Kennedy Valve Div. of ITT Grinnell Valve Co. Model K81A hydrants unless indicated otherwise. All hydrants shall have stainless steel bolts.

3) Installation

Hydrants shall be set plumb, properly located with the pumper nozzle facing the closest curb of a fire lane or street, but not a parking space. The back of the hydrant opposite the pipe connection shall be firmly blocked against the vertical face of the trench with 1/3 cubic yard of concrete. All piping in hydrant unit shall be anchor coupling piping and NOT spool pieces with tier rods. A minimum of 8 cubic feet of stone shall be placed around the drains. The backfill around the hydrants shall be thoroughly compacted. Hydrant installation shall be in accordance with the Detail W2. Hydrant Tees and mechanical restraints may be used upon approval of the Town of Erwin

6.03 VALVES AND APPURTENANCES

A. Valves

1) General

Valves shall be installed on all branches from feeder mains and hydrants according to the following schedule: 4 valves at "tee" intersections; and one valve on each hydrant branch. When a loop section of water line is connected back into the feeder main within a distance of 200 feet or less, only one valve will be required in the feeder main. Valves shall be turned to the left to open.

Where no water line intersections are existing, a main line valve should be located at not more than 500 foot intervals in commercial districts and at not more than one block or 800 foot intervals in other districts or as allowed by the Town Engineer.

Valves shall be properly located, operable and at the correct elevation. All valves, wedge action retainer glands and reducers shall be rodded to the tee or cross if one is located within 10 feet as shown in the Details. If reducers cannot be rodded, concrete blocking or other restraining methods will be required. The valve box shall be centered over the wrench nut and seated on compacted backfill without touching the valve assembly. All valve box covers shall be flush with the top of the pavement or flush with finished grade. The maximum depth of the valve nut shall be 5 feet. When valve extension kits are used, they must be manufactured by the same company which manufactured the valve. All buried valves shall have stainless steel hardware.

2) Combination air valves

Combination air valves shall be installed at <u>all</u> high points of water lines 8 inches in diameter or larger and at other locations as directed by the Town Engineer. The water main shall be installed at a grade which will allow the air to migrate to a high point where the air can be released through an air valve. A minimum pipe slope of 1 foot in 500 feet should be maintained. The valve shall be manufactured for a 150 PSIG working pressure, sized by the Engineer, and approved by the Town.

Combination air valves shall be of the single housing style that combines the operation of both an air/vacuum and air release valve. The valve must meet the requirements of AWWA C512 and be installed in accordance with the Details.

3) Check Valves

A. Valve Size: 3-inches and Less

Check valve shall be tee style, bronze body, 125 psi pressure rating, metal to metal seating as manufactured by Watts, Wilkins, Nibco or approved equal.

B. Valve Size: 4-inch

Check valve shall be globe style silent check valve, ductile iron body, resilient seat with 304 stainless seal trim as manufactured by Golden Anderson, Val-Matic or approved equal.

C. Valve Size 6-inch and greater

Swing-check valves shall conform in all respects to AWWA C508. All valves shall have flanges conforming to ANSI B16.1 Class 125. All swing-check valves are to be equipped with an outside lever and weight assembly.

Body, cover, disc, and levers shall be cast iron. Seat shall be bronze and renewable seating ring shall be Buna-N. Pivot shaft shall be stainless steel. Fasteners holding seating ring in place shall be stainless steel. Where cushion cylinder is specified, it shall be bronze and pivot shaft shall be sealed off from the cushion cylinder

through a stuffing box. Check valve shall be independently adjustable for disc closing speed and for range over which cushion cylinder operates.

Swing-check valves shall conform in all respects to AWWA C508. All valves shall have flanges conforming to ANSI B16.1 Class 125. All swing-check valves are to be equipped with an outside lever and weight assembly.

Body, cover, disc, and levers shall be cast iron. Seat shall be bronze and renewable seating ring shall be Buna-N. Pivot shaft shall be stainless steel. Fasteners holding seating ring in place shall be stainless steel. Where cushion cylinder is specified, it shall be bronze and pivot shaft shall be sealed off from the cushion cylinder through a stuffing box. Check valve shall be independently adjustable for disc closing speed and for range over which cushion cylinder operates.

4) Gate Valves

Gate valves 2 inches and greater shall meet all requirements of AWWA C500 for a working pressure of 150 psi and be manufactured by Kennedy Valve with resilient seat wedges. All shall be mechanical joint with iron body, bronze mounting double disc parallel seat type with a non-rising stem and open left with a double O-ring seal.

Gate valves, up to and including 12 inches, shall be installed in a vertical position.

Gate Valves 16 inches and larger must be approved by the Town Engineer. They may be installed horizontally and equipped with bevel gears, grease case, rollers, tracks scrapers, and a bypass located on the side of the body (fully revolving disc valves shall not require rollers), or vertically and be equipped with spur gears enclosed in a grease case and with a bypass located on the side of the body. In either case, the roller and scraper operators shall be installed in a manhole.

a) Resilient seat wedge gate valves

Resilient seat wedge gate valves shall be manufactured in accordance with AWWA C509. Approved manufacturers include Kennedy Valve.

5) Butterfly Valves

Butterfly Valves shall be installed in water lines 16 inches or greater. All shall meet the requirements of AWWA C504 with mechanical joints, 2 inch open left operating nut. All valves 24 inches and greater shall be installed in a manhole as shown in the Details.

Butterfly valves shall only be used for interior applications as approved by the Town or their representative.

6) Valve boxes

Valve Boxes shall be cast iron, screw or telescopic type, with a 5 inch opening and "water" stamped on the cover. Valve box ring adjustments will not be allowed.

B. Appurtenances

1) Pipe fittings

Pipe Fittings shall be ductile iron designed and manufactured as per AWWA C110. Sizes of fittings up to and including 12 inches shall be designed for an internal pressure of 250 psi, and larger size fittings shall be designed for an internal pressure of 150 psi. Compact ductile iron mechanical joint fittings designed and manufactured as per AWWA C111 are also acceptable. Joints for fittings shall be mechanical and lined with cement mortar with a seal coat of bituminous material, all in accordance with AWWA C104.

2) Blowoffs

Blowoffs shall be a minimum of 2 inches and installed at the end of all dead-end water lines and approved by the Town. Where there is not sufficient pressure or fire hydrants to thoroughly flush the system, a larger blowoff will be required.

Blowoff Assemblies shall be constructed as shown in the Details. The valves shall be gate type with a non-rising stem and a 2 inch operating nut. A full size valve is required on mains that are planned to be extended.

3) Thrust Restraint

Reaction Blocking for all fittings or components subject to hydrostatic thrust shall be securely anchored by the use of concrete thrust blocks poured in place. No concrete shall interfere with the removal of fittings. Material for reaction blocking shall be 3000 psi concrete. A minimum 4 mil plastic shall cover the fitting to ensure that no concrete will interfere with removal of the fitting. Alternative restraining methods and mechanical joint restraints coupled with gripper style gaskets may be used upon approval by the Town Engineer. At a minimum, all mechanical joints shall be restrained with a wedge action retainer gland coupled with the installation of gripper style gaskets used on all push-on joints located within 40 ft. of said mechanical joint fitting.

6.04 WATER SERVICE TAPS

A. Location/Design

1) Individual water services, and multiple branch services, shall be provided from the main to each water meter for single family residences in accordance with the Details. All connections shall be made by wet taps.

Service connections shall be made perpendicular to the main and shall run straight to the meter.

Water meter boxes or vaults shall be provided at the property line when the water service length is more than 100 ft. All services shall be made using a continuous piece of tubing. No joints will be allowed between the water meter and municipal watermain. Water meter boxes shall not be placed in streets, sidewalks, parking areas or obstructed by fencing or buildings. Exceptions to these conditions will be at the direction of the Town of Erwin. All structures shall be designed to protect water main from freezing.

NOTE: Meter box or vault to be purchased and installed by landowner.

Provisions for backflow prevention shall be in accordance with the NYSDOH Requirements and the Town's Cross Connection Control Policy.

2) The water meter shall be sized based on both minimum and maximum water demand. Multiple branch services size shall be determined by an Engineer

3) Service taps to existing water lines shall be made by the Contractor under direct supervision of the Town. Service taps to new water lines shall be made by the Contractor in accordance with the Specifications.

   Service taps greater than 2 inches shall be made by a Contractor of the Developer. A strainer shall be provided upstream of the meter on lines greater than 2 inches.

B. Materials

1) Taps

The maximum size of direct taps without a fitting, tapping sleeve or saddle for ductile iron water mains shall be as follows:

Main Size	Tap Size
4"	¾"
6"	1"
8"	1 ¼"
10"	1 ½"
12"	2"

2) Tapping Sleeves

Tapping Sleeves shall be 2 piece split cast iron. The sleeve shall be mechanical joint to the main line and flanged to the tapping valve.

3) Tapping Saddles

Tapping Saddles shall be used on mains 16 inches and larger. Saddles shall be made of ductile iron providing a factor of safety of 2.5 with a working pressure of 250 psi. Saddles shall be equipped with a AWWA C110 flange connection on the branch. Sealing gaskets shall be O-ring type, high quality molded rubber having an approximate 70 durometer hardness, placed into a groove on the curved surface of the saddles. Straps shall be alloy steel.

The maximum size saddle outlet for each size of pipe to be tapped shall be as follows:

Size of Pipe to be Tapped	Maximum Size of Saddle Outlet
16"	8"
18"	8"
20"	10"
24" and larger	12"

4) Corporation Stops

Corporation Stops shall be ball type, made of brass and complete with a compression or flared coupling and AWWA Standard threads as per AWWA C800. Mueller Company Model H-15008 for 3/4" stops and Model H-15013 for 2" stops or equal shall be used.

Taps shall be located at 10:00 or 2:00 o'clock on the circumference of the pipe. Service taps shall be staggered alternating from one side of the water main to the other and at least 12 inches apart. The taps must be a minimum of 24 inches apart if they are on the same side of the pipe.

No burned taps will be allowed and each corporation stop will be wrapped with Teflon tape for ductile iron pipe water mains. No taps are allowed on a fire hydrant line. No tapping shall be made where rodding is placed.

5) Service saddles

Service Saddles shall be bronze body (85-5-5 waterworks brass) and double strap for taps over 1 inch with silicon bronze nuts conforming to ASTM A98 and factory installed grade 60 rubber gaskets.

6) Copper Service Tubing

Copper service tubing shall be type K soft copper tubing per ASTM B88. The longest available length of service line shall be used with no unions prior to meter installation.

Any water service installed beneath a Town road by way of directional drill or using a missile devise shall be installed within a suitable casing piping having a diameter large enough to accommodate the O.D. of the water service.

7) Polyethylene Service Tubing

Tubing shall be virgin polyethylene conforming to AWWA C901. It shall be ASTM PE2306 or PE2406 and SDR 9 (pressure class 200 psi) or heavier.

Tubing shall be installed with a 10 AWG copper tracer wire with PVC insulation taped to the tubing at sufficient intervals. Tracer wire shall be permanently fastened to the tubing.

Tubing shall be certified as suitable for potable water products by National Sanitation Foundation (NSF-14).

Fittings for use with polyethylene tubing shall be brass compression style with stainless steel insert stiffeners.

Any water service installed beneath a Town road by way of directional drill or using a missile devise shall be installed within a suitable casing piping having a diameter large enough to accommodate the O.D. of the water service.

8) Meter boxes for 1 inch services

1" meter boxes shall be cast iron box and cover with a meter yoke and or copper resetter. Meter box shall protect internal water components from freezing.

9) Meter boxes for 1 1/2 and 2 inch services

1 1/2" and 2" meter boxes shall be light weight polymer concrete as indicated in the Standard Details. Piping for 1 1/2 and 2 inch water meters shall be constructed from brass and copper tubing and shall be equipped with angled check valve outlets and by-pass flanged valve or by-pass flanged ball valve inlets. To ensure positive discharge, the box should be tied into the existing storm drain system, or shall have an open bottom to all drainage through stone. Meter box shall protect internal water components from freezing.

10) Meter Pit/Vaults

Meter vaults and access doors within street right of way shall meet HS-20 loading requirements and shall be located outside of travel areas. The access hatch shall be aluminum with a flush drop lift handle, stainless steel hinges and bolts, a stainless steel slam lock, an automatic hold open arm, and compression springs to allow for easy opening while maintaining HS-20 loading capacity. To ensure positive drainage, the vault shall be tied into the existing storm drainage system. If positive drainage is unobtainable, a sump pump shall be located and operated in the vault. Vault shall be protected from freezing conditions. If heating elements are required, they shall be provided and maintained at the expense of the property owner(s).

11) Curb Box

Cub stops shall be all bronze with check. They shall be designed for a working pressure of 150 PSI and a test pressure of 300 PSI.

Curb boxes shall be the Mueller Model H-10314 for 3/4" and 1” extension type, arch pattern, cast iron, adjustable, with the word water cast in the top, and an arrow indicating the direction of opening equipped with a stationary rod and ring guide.

Boxes shall be set plumb and concentric with the valve. The box shall rest on firm bearing so that it is independent of the valve and service line.

6.05 TESTING AND INSPECTION

A. Installation

All materials must be approved by the Town prior to installation. Materials rejected by the Town shall be immediately removed from the job site.

The Contractor shall furnish all materials, labor, and equipment to perform all testing and inspections to the satisfaction of the Town or their representative. The Town shall provide access to water for testing purposes on water mains.

B. Testing

1) Hydrostatic Testing

No valve in the Town water system shall be operated without authorization from the Town. A section of line which is to be hydrostatically tested shall be slowly filled with water at a rate which will allow complete evacuation of air from the line. Hand pumps shall not be used for the pressure testing of water mains. Taps used for testing purposes shall be removed after testing and repaired using a stainless steel full circle repair clamp.

The line shall be tested to a pressure of 1.5 x working pressure or 150 psi as measured at the lowest elevation of the line for a duration of 2 hours. No pipeline installation shall be approved by the Town when pressure varies by more than 5 pounds per square inch (psi) at completion of hydrostatic pressure test. Test shall be conducted in the presence of the Town Engineer. At the end of the test period, the leakage shall be measured with an accurate water meter.

$L = [SD\sqrt{(P)}]/133,200$

L = allowable, in gallons per hour
S = length of pipe tested, in inches
D = nominal diameter of pipe, inches
p = average test pressure during leakage test, pounds per square inch (gauge)

All visible leaks shall be repaired regardless of the amount of leakage.

2) Chlorination

All additions or replacements to the water system shall be chlorinated before being placed in service under the supervision of the Town Engineer in the following manner:

a) Taps shall be made at the control valve at the upstream end of the line and at all extremities of the line including valves.

b) Quality Assurance

i) Perform Work in accordance with AWWA C651-05.

c) Qualifications

i) Disinfection method to be approved by Town before commencement of disinfection.

ii) Testing Firm: Laboratory specializing in testing potable water systems, certified by NY State Department of Health. Disinfection process must be observed by Town.

iii) Submit bacteriologist's signature and authority associated with testing. NYS certified testing lab to conduct bacteria and chlorine residual testing.

d) Products

i) Disinfection Chemicals

1. Chemicals: AWWA B300, Hypochlorite, AWWA B301, Liquid Chlorine, AWWA B302, Ammonium Sulfate, and AWWA B303, Sodium Chlorite.

e) Execution

i) Examination

1. Section 01 30 00 - Administrative Requirements: Verification of existing conditions before starting work.

2. Verify piping system has been cleaned, inspected, and pressure tested.

3. Perform scheduling and disinfecting activity with start-up, water pressure testing, adjusting and balancing, demonstration procedures, including coordination with related systems.

ii) Installation

1. Provide and attach required equipment to perform the Work of this section.

2. Perform disinfection of water distribution system and installation of system and pressure testing.

3. Inject treatment disinfectant into piping system.

4. Maintain disinfectant in system for 24 hours.

5. Flush, circulate, and clean until required cleanliness is achieved; use municipal domestic water.

6. Replace permanent system devices removed for disinfection.

iii) Field Quality Control

1. Section 01 40 00 - Quality Requirements 01 70 00 - Execution and Closeout Requirements]: Field inspecting, testing, adjusting, and balancing.

2. Disinfection, Flushing, and Sampling:
   a. Disinfect pipeline installation in accordance with AWWA C651-05. Use of liquid chlorine is not permitted
   b. Upon completion of retention period required for disinfection, flush pipeline until chlorine concentration in water leaving pipeline is no higher than that generally prevailing in existing system or is acceptable for domestic use.
   c. Legally dispose of chlorinated water. When chlorinated discharge may cause damage to environment, apply neutralizing

chemical to chlorinated water to neutralize chlorine residual remaining in water.

After final flushing and before pipeline is connected to existing system, or placed in service, employ an approved independent testing laboratory to sample, test and certify water quality suitable for human consumption.

3) Bacteriological Sampling

Free residual chlorine after 24 hours shall be at least 10 ppm or the Town Engineer will require that the lines be rechlorinated.

Flushing of lines may proceed after 24 hours, provided the free residual chlorine analysis is satisfactory. Flushing shall be contained until an orthotolidine check shows that the lines contain only the normal chlorine residual. Samples for bacteriological analysis shall be collected by the Town's Inspector 24 hours after flushing is completed. The Contractor shall furnish the sample bottles, the testing agency and such help as may be required to secure these samples. The contractor shall also submit the test results to the Town's inspector.

If test results are unsatisfactory, the Contractor shall immediately rechlorinate lines and proceed with such measures as are necessary to properly sterilize the lines.

The new water system shall be valved off from the existing system until a satisfactory bacteriological sample has been obtained and the Town Engineer has authorized the use of the new water system.

6.06 REPAIR OF WATER LINES

A. General Repairs

1) Joint leaks of Cast Iron Pipe, Ductile Iron Pipe, and PVC pipe shall be repaired by use of a bell joint leak repair clamp domestically manufactured by Rockwell, or other approved equal.

2) Line Breaks or Punctures shall be repaired by a full circle repair clamp domestically manufactured by Rockwell, Mueller, or other approved material. All bands and bolts shall be stainless steel.

3) Line Splits or Blow Outs shall be repaired by replacing the damaged section with ductile iron pipe with a cast iron coupling at each end. The following cast pipe couplings shall be used for each pipe material indicated:

   a) A.C. Pipe – Rockwell 441 cast coupling or other approved equal

   b) Ductile Iron Pipe – Rockwell 431 cast coupling or other approved equal

   c) PVC Pipe – Rockwell 411 cast coupling or other approved equal

4) For A.C. Pipe to PVC or Ductile Iron Pipe use a cast pipe coupling with different end diameters sized specifically for the pipe materials and pipe outside diameter at each end.

B. Water Service Line Repairs

1) A water service line severed between the water main and the water meter shall be repaired using new type K copper tubing and bronze or brass 3 piece compression unions.

2) A corporation stop pulled out of a PVC pipe water main shall have a new service saddle and a new corporation stop installed on the water main.

3) A corporation stop pulled out of a ductile iron pipe shall have a full circle repair clamp placed over the old tap hole. A new tap shall be made and a new corporation stop installed on the water main.

6.07 WELL ABANDONMENT

A. Specifications

Existing groundwater wells within the Town of Erwin which are to be taken out of service shall be abandoned in accordance with the following specifications and requirements. The guiding principle shall be followed by the contractor in the abandonment of existing wells is the restoration, as far as feasible, of the controlling geological conditions that existed before the well was drilled or constructed. Abandoned wells shall be sealed to prevent contamination of groundwater, to conserve yield and hydrostatic head of aquifers, and to prevent the intermingling of desirable and undesirable waters.

1) Only New York State registered water well contractors shall be permitted to perform the well abandonment or unless otherwise approved by the Town.

2) The well bore must be bailed to remove obstructions that would prohibit the access to the entire well bore for the purpose of well abandonment.

3) If the well is fitted with a screen or perforations to permit water to enter the well from the water bearing formations, this area will be backfilled with clean, disinfected sand or gravel. Then the remainder of the well bore shall be backfilled with a grout mixture of cement and bentonite. The grout ratio shall be 6 pounds of bentonite per 98 pounds of cement mixed with 6 gallons of potable water.

4) The grout will be pumped or tremied to the bottom of the borehole or top of the sand and gravel via a tremie pipe. The tremie pipe shall be removed as the welt is grouted to provide a continuous grout seal. As the grout is pumped or tremied into the well, the well casing shall be removed.

5) Grout shall not be poured from the surface into any well containing water. If the well is dry, then the grout mixture may be poured from the surface with care t prevent bridging.

6) The grout seal shall be terminated at a point 3 feet below ground level.

7) The well pump, discharge piping, appurtenances, and other obstructions shall be removed, as part of the well abandonment procedure.

8) A detailed report shall be prepared and provided to the Town of Erwin which includes the following data.

a. Depth of well. Verify the depth of the well by sounding with a weighted tape.

b. Diameter and nature of casing.

c. Depths sealed. The depth of each layer of all sealing and backfilling materials shall be recorded.

d. Quantity of sealing material used. The quantity of sealing materials used shall be recorded. Measurements of static water levels and depths shall be recorded.

e. Changes recorded. Any changes in the well during its abandonment, such as pump removal and casing removal, shall be recorded in detail.

f. Original well driller's records, if available.

In addition, data regarding the existing well such as diameter, depth, and screens shall be provided. The Town of Erwin shall be notified one week in advance prior to the start of abandonment procedures, to allow the Town to complete a visual inspection.

For residential wells, the Town of Erwin shall decide on a case by case basis, at its discretion, whether the pulling of the casing is required (as well as other abandonment procedures). Factors to be considered include diameter of the casing, proximity to onlot septic systems (and other potential sources of pollution), proximity to other wells, proximity to wellhead protection areas, and proximity to surface water. In the event that the well casing is not removed, the well casing shall be cut off 3 feet below ground level and a water-tight cap provided, in addition to the other applicable requirements noted above (including filling the casing with bentonite grout seal). All well abandonment procedures must be submitted to and approved by the Town of Erwin, prior to the start of abandonment activities.

6.08 CROSS CONNECTION CONTROL POLICY

A. Backflow/Backsiphonage Program

1) General

a) The Town of Erwin recognizes the need for a Backflow/Backsiphonage Program to ensure the public's safety and welfare. The Residents and Customers Town of Erwin should be able to rely on clean and safe drinking water at all times and only a system protected against backflow and backsiphonage can ensure clean and safe drinking water.

b) The program will be managed by the Town of Erwin Water Department and will have the assistance of the Local Health Department, the Town of Erwin Code Department and the Town Engineer.

c) The guidelines set forth by the New York State Health Department shall be used as the Town of Erwin's guidelines and will hold true for all consumers of the Town's water.

2) Degree of Hazard

a) To achieve containment, an acceptable backflow prevention device must be installed in every service connection to a facility. Three categories should be considered when determining the degree of hazard posed by a facility and making the subsequent determination of the type of protective device required: use, toxicity, and availability of contaminants; availability of supplementary supply of water; and fire fighting

system evaluation. Based on these considerations, it will be possible to rate a facility as hazardous, aesthetically objectionable or non-hazardous.

b) Potential Hazards

The following listings will be helpful in determining the degree of hazard posed by a particular facility based on use and availability of contaminants.

It is not possible to list every circumstance and facility type that may be encountered by the Town while evaluating their customers. The Town while evaluating a facility also will rely on good sense and the help of the Local Health Department Engineer.

i) Hazardous Facilities

The following partial listing gives examples of the types of facilities which would require an acceptable RPZ or air gap to be installed in the service connection to the public water distribution system.

Type of Facility	**Potential Hazard**
Sewage & industrial wastewater treatment plants & pumping stations sewer flushers, etc.	Sewage industrial wastewater, contaminated water, toxic chemicals, etc.
Paper manufacturing or processing, dye plants, petroleum processing, printing plants, chemical manufacturing or processing, industrial fluid systems, steam generation, rubber processing, tanneries.	Toxic chemicals, water conditioning compounds Examples: Toxic dyes, acids, alkalies, solvents, quarternary ammonia compounds, mercury, chromium, etc.
Canneries, breweries, food processing, milk processing Ice manufacturing, meat packers, poultry processing, rendering companies, etc	Process water, steam, detergents acids, caustics, refrigeration lines.
Hospitals, clinics, laboratories, veterinary hospitals, mortuaries, embalmers, etc.	Bacterial cultures, laboratory solutions, blood & tissue waste, toxic materials, etc.
Shipyards, marinas, etc.	Sea water, sewage, contaminated Water, etc.
Metal-plating, photo processing, laundries, commercial car washes, commercial refrigeration systems.	Toxic chemicals, concentrated cleaning agents, solvents, etc. Examples: dry-cleaning est. etc. Cyanides, fluorides, copper, chromium, caustic & acid solutions.
Commercial greenhouses, spraying	Toxic Chemicals Examples:

& irrigation systems using weedicides herbicides, exterminators.	Ammonium salts, phosphates, 2.4 D sodium arsenate, lindane, malathion.
Boiler systems, cooling towers or Internal fire fighting systems using conditioners, inhibitors, corrosion Control chemical, etc.	Toxic chemicals Examples: Hydrazine, sodium compounds, antifreeze solutions, etc.

Typically: Apartment Buildings, Cooling Towers, and Warehouses

ii) Aesthetically Objectionable Facilities

The following partial listing gives examples of the types of facilities which would require an acceptable DCV to be installed in the service connection to the public water distribution system.

Type of Facility	**Potential Hazard**
Customer fire protection Loops, fire storage tanks	Stagnant water, objectionable tastes, odors.
High temperature potable water	Objectionable temperatures
Utilization of food grade dyes	Objectionable color
Complex plumbing systems in Commercial buildings typically:	Plumbing errors, obsolete plumbing equipment, poor plumbing inspection/correction programs.

Barber Shops
Beauty Salons
Churches
Apartment Buildings
Gas Stations
Supermarkets
Nursing Homes
Construction Sites
Carnivals

iii) Non-Hazardous Facilities

The containment approach would not apply. The following partial listing indicates the type of facility that would probably qualify:

Type of Facility	**Corrective Measures**
Private homes	None; rely on internal plumbing control
"Dry" Commercial Establishments without complex plumbing systems.	

c) Protective Devices

i) Non-hazardous facilities should be protected through an internal plumbing control program to ensure that plumbing cross-connections are adequately protected or eliminated.

ii) A hazardous facility must be contained through the use of RPZ or an air gap.

iii) An aesthetically objectionable facility must be contained through the use of a DCV.

2) Devices/Testing

a) All notification of need for installation and inspection of backflow devices and follow up communication for non-compliance, is the responsibility of the Town of Erwin and will have the authority set forth by the Part (5) Public Water Supply Sanitary Codes; specifically, section 5-1.31 of the Public Health Law 225 titled Cress Connection Control and the Public Water Supply guide for Town Cross Connection control Program. The Town has the option of discontinue water service for non-compliance with the Town Backflow/Backsiphonage Program.

b) The testing of backflow devices will be performed by Certified Backflow Device Testing personnel on an annual basis.

c) Repair of the devices will be performed by Certified Backflow Device Testers only. Licensed Plumbers and Backflow Diverse Testers must file proof of insurance at the Town office. Licensed Plumbers must be certified by the State of New York for Cross Connection Control to perform repairs and subsequent testing of their work in the Town of Erwin.

3) Private Homes

a) Containment of private homes will be based on a reasonable determination of a potential hazard. Examples would include private homes with wells connected to the public water supply, irrigation systems or other uses of water such as film developing, etc.

b) New Construction and replacement of services at private residences may require a backflow device consistent with the degree of hazard. However no goals or compliance dates have been established at this time.

4) Industrial/Commercial and Multi-family/Apartments:

a) All Multi-family accounts will be inspected for degree of hazard. Individual hardships will be addressed and any necessary extensions will be set by the Town.

b) All Industrial accounts will be inspected for degree of hazard and are required to have a backflow device.

c) All Industrial fire service will be inspected for degree of hazard and are required to have a backflow device.

d) All Commercial accounts will be inspected for degree of hazard and are required to have a backflow device.

e) New construction and replacement of services at Multi-family, commercial and industrial accounts will require a backflow device consistent with the degree of hazard.

f) Consumer must be inspected to determine degree of hazard for both domestic and fire services.

b) Initial thoughts and concerns will be addressed to the consumer.

c) The consumer must hire an Engineer registered in the State of New York to design the backflow protection.

d) Application for approval of the device must be submitted to the Town with an Engineering Report, plans and specifications, in quadruplicate, for review.

e) Plans are reviewed and if they do not meet requirements they will be returned to the consumer; it they meet requirements they are forwarded to the Local Health Department.

f) Once final approval is made by the Local Health Department, the plans are returned to the consumer and work may proceed.

g) When work is completed, the installation must be inspected by the Engineer that designed the system and a letter sent to the Town stating that compliance has been met.

h) The Town must inspect the installation to document that ht e installation was completed in accordance with the approved application.

i) Twelve months from the date of installation and annually thereafter, the device shall be tested by N.Y.S. Certified backflow device Tester and a test report sent to the Town.

5) Construction Sites

a) Before temporary water is turned on, it must have an approved backflow device installed and tested. The device must be consistent with the degree of hazard at the site.

6) Fire Hydrants

a) An air gap or RPZ device is required for the use of a fire hydrant, other than the fighting of fires.

7) Testers / Services

a) All testers must be registered with the Town and must be insured.

b) A copy of a valid Backflow Tester Certificate must be on file with the Town.

8) Definitions

a) Acceptable Backflow Prevention Device is an acceptable air gap, reduced pressure zone device or double check valve assembly as used to contain potential contamination within a facility.

b) Acceptable Devices are those devices or assemblies found to be acceptable for containment control in New York State in accordance with the Department of Health requirements as outlined in section 8.

c) Aesthetically Objectionable Facility is one in which substances are present, which if introduced into the public water supply could be a nuisance to other water customers, but would not adversely affect human health. Typical examples of such substances are: food-grade dyes, hot water, stagnant water from fire lines in which no chemical additives are used, etc.

d) Air Gap Separation means the unobstructed ventricle distance through the free atmosphere between the lowest plumbing fixture, or other device and the flood level rim o the receptacle. The differential distance shall be at least double the diameter (D) of the supply pipe. In no case shall the air gap be less than 1".

e) Backflow is the unwanted reversal of flow of water, introduced by a differential in pressure, which causes the flow of water or other liquids and / or gases into the distribution pipes of a public water supply from any source other than its intended source.

f) Back pressure means the resulting backflow of contamination, polluted, or otherwise unacceptable quality from a plumbing fixture or other customer source(s) into public water supply system due to a greater pressure within the customer's water system.

g) Backsiphonage means the backflow of a contaminated or polluted water, or water of questionable quality from a plumbing fixture or other customer source(s), into a public water supply system main. Due to a temporary negative or sub-atmospheric pressure within the public water supply system.

h) Customer means a water user served by a public water system.

i) Customer's Water System means any piping used to convey water supplied by a public water supply system throughout a customer's facility.

j) Containment means cross-connection control which isolates the customer's facility from the public water system so as to provide the protection necessary to prevent contamination of the public water supply in the event of backflow from the customer's facility.

k) Contamination means the presence in water of a substance that tends to degrade its quality.

l) Cross-Connection means physical connection through which a water supply could be contaminated.

m) Degree of Hazard means whether a facility is rated as Hazardous, Aesthetically, Objectionable or Non-Hazardous.

n) Double Check Valve (DVCA) Assembly, acceptable means to single independently acting check valves, including tightly closing shutoff valves located at each end of the assembly and suitable connections for testing the water tightness of each check valve.

o) Hazardous Facility is one in which substances may be present which if introduced into the public water supply system would or may endanger or have an adverse effect on the health of other water customers. Typical examples: Laboratories, Sewage Treatment Plants, Chemical Plants, Hospitals, and Mortuaries.

p) Interconnection is a joining of two independently operated public water supply distribution systems.

q) Local Health Department Engineer is the City, County, District, or Regional Health Department Engineer having jurisdiction.

r) Non-Hazardous Facility is one which does not require the installation of an acceptable backflow device.

s) Plumbing Control is the prevention and elimination of cross-connections within the customer's water system by enforcement of building or plumbing codes.

t) Public Water Supply System means a supplier of water system including the source, treatment works, transmission mains, distribution system and storage facilities serving the public.

u) Reduced Pressure Zone (RPZ) Device Acceptable means a minimum of two indecently acting check valves, together with an automatically operated pressure differential relief valve located between the two check valves. During normal flow and at the cessation of normal flow, the pressure between these two checks shall be less than the upstream (supply) pressure. In case of leakage of either check valve, the differential relief valve, by discharging to the atmosphere, shall operate to main pressure at 2 psi less than the supply pressure. The unit must include tightly, closing shutoff valves located at each end of the device, and each device shall be fitted with properly located test cocks.

v) Supplementary Supply means any water source or system other than the public water supply, which is available within the water customer's facility.

Supplier of Water means the owner or operator of a public water system.

SECTION 7.00

SANITARY SEWER

1.01. GENERAL REQUIREMENTS

All work shall be done in accordance with the Town of Erwin Sanitary Sewer Code.

Three (3) days notice shall be given the Town prior to beginning of sewer work. Twenty-four (24) hour notice is required for inspection prior to backfill. **All** sewer work shall be inspected by the Town of Erwin prior to ANY backfill.

1.02. Gravity Sewer

A. Design

1) Main Location

a) All public sanitary sewer mains shall be installed in dedicated street right of way or in dedicated utility easements. Mains installed in Town of Erwin right of way shall be located on the side of the roadway. Mains within easements shall be centered within the easement. Mains located within NYSDOT right of way shall be placed in accordance with NYSDOT standards.

b) Mains paralleling a creek shall be of sufficient depth to allow lateral connections below the stream bed elevation. The top of the sewer main and laterals shall be at least one foot below the stream bed. Concrete encasement and ductile iron pipe shall be required when the cover between the top of the pipe and the stream bed is less than 3 feet.

c) All laterals shall have metal covers on curb (Cleanouts). Laterals shall be maximum eight (8) feet in depth.

d) In accordance with Town Standards, mains must be extended along natural drainage courses to the adjacent property line.

e) Mains over 20 feet deep require ductile iron or reinforced concrete pipe for the entire run between manholes.

f) Mains shall have a minimum vertical separation of 12 inches between storm pipe when the horizontal separation is 3 feet or less. Where sanitary and storm sewers cross with a vertical separation of less than 12 inches joints within 12 ft. of the crossing should be encased in concrete.

g) There shall be a minimum 5 foot horizontal separation between parallel gravity and/or force mains.

h) Mains shall have a minimum horizontal separation of 10 feet from water lines, unless the top of the sewer main is at least 18 inches below the bottom of the water main and there is a horizontal separation of at least 3 feet from the closest edges of the pipes.

i) Where sewer mains cross beneath water mains with a vertical separation of 18 inches or less, or where water mains cross under sewer mains, the entire leg of

sewer main shall be ductile iron pipe. The water line pipe shall be centered at the point of crossing, which shall be at an approximate 90 degree angle.

2) Main Size

a) Public gravity mains shall be SDR 35 PVC pipe and have a minimum size of 8 inches diameter.

b) Sanitary sewers shall be designed to carry the projected peak flow at no more than 2/3 full. The recommended minimum velocity for sanitary sewer lines is 3 fps, which may be reduced to 2.5 fps with approval from the Town Engineer.

c) The minimum grades for public sanitary sewers shall be as follows:

Main Size (in)	Minimum Slope (ft/100 ft)
8	0.40
10	0.28
12	0.22
14	0.17
15	0.15
16	0.14
18	0.12
21	0.10
24	0.08
27	0.07
30	0.06

d) The minimum slope for the uppermost reach of a sanitary sewer line shall be 1% regardless of sewer line size.

e) The maximum grade for sanitary sewers is 10%. The maximum velocity in sanitary sewers is 15 ft/sec. These limits may be exceeded with the approval of the Town Engineer and the incorporation of the following provisions:

f) All sewers of greater than 10% slope and the downstream run of pipe must be ductile iron pipe.

g) High velocity manholes shall be used on all sewers with a slope greater than 10%. High velocity lines cannot tie directly to an existing line and must proceed 180° through the invert into the downstream line.

h) Concrete anchors shall be installed on all sewers of greater than 10% slope at the following spacing:

i) Not over 36' center to center on grades from 10% to 25%

ii) Not over 24' center to center on grades from 25% to 40%

iii) Not over 16' center to center on grades exceeding 40%

i) Sewer extensions should be designed for projected flows, even when the diameter of the receiving sewer is less than the diameter of the proposed extension.

j) Pipe diameter changes shall occur in manholes, with the invert of the larger pipe lowered sufficiently to maintain the same energy gradient. An approximate method of obtaining this result is to place the 0.8 depth point of both sewers at the same elevation.

3) Manhole Location

a) Manholes shall be spaced at a maximum distance of 300 feet for lines 12 inches in diameter or less, and 400 feet for lines greater than 12 inches.

b) Manholes shall be installed at each deflection of line and/or grade. The flow channel through manholes should be smooth and shall conform to the shape and slope of the entering/exiting sewer line. Either pre-cast or brick and mortar inverts may be used. Moorbase manholes shall not be used. Inside or outside drops shall be used when free drops exceed 24 inches. For inside drop manholes, the last joint of incoming sewer main shall be ductile iron. This is the only case where transition of pipe material between manholes is acceptable, and it requires a Fernco coupling encased in concrete.

c) Manholes not located in roadways and landscape areas shall have a top elevation a minimum of 6 inches above finished grade.

4) Manhole Sizing

a) Manholes for pipes 12 inches and under in diameter shall be a minimum of 4 feet in diameter. Manholes for sewer pipes greater than 12 inches shall be a minimum of 5 feet in diameter.

b) Inside drops require a minimum 5 foot diameter manhole. When 2 or more inside drops occur at one manhole, a minimum 6 foot diameter manhole shall be used.

B. Materials

Materials specified herein are acceptable for sewer service as described herein.

1) <u>Pipe Material</u>

a) Polyvinyl Chloride (PVC) Pipe

PVC Pipe shall be made of PVC plastic having a cell classification of 12454-B, 12454-C or 13364-B (with minimum tensile modulus of 500,000 psi) as defined in Specification D1784. PVC pipe shall have integral wall bell and spigot joints for the conveyance of domestic sewage. Fittings shall be made of PVC plastic having a cell classification of 12454-B, 12454-C or 13343-C as defined in ASTM D 1784. Fittings must be manufactured by pipe supplier or approved equal, and have bell and/or spigot configurations compatible with that of the pipe. Compounds with superior properties are also acceptable.

All pipe less than 18 inches in diameter shall have a maximum Standard Dimension Ratio (SDR) of 35. Where laying conditions so warrant, and in accordance with manufacturer's recommendations, lower SDR values (stronger pipe) may be required.

PVC pipe 18 inches in diameter and larger must be spiral wound as defined in ASTM F-794, Series 46. Pipe strength shall be equal to or exceed that required for pipe less than 18 inches in diameter.

b) Ductile Iron Pipe

Ductile iron pipe shall be designed and manufactured in accordance with AWWA C150 and C151 for a laying condition Type 2 and a working pressure as follows:

i) 3”-12”: 350 psi

ii) 14”-20”: 250 psi

iii) 24”: 200 psi

iv) 30”-54”: 150 psi

Pipe joints shall be of the push-on type per AWWA C111. Pipe lining shall be cement mortar with a seal coat of bituminous material, all in accordance with AWWA C104.

All buried DIP and fittings shall have bituminous coating on the exterior surface in accordance with AWWA C151.

Pipe shall be supplied in minimum 18 foot lengths unless approved otherwise by the Town Engineer.

2) Material Identification

Each length of pipe shall have plainly and permanently marked thereon the following information, as well as any additional information specifically noted in the sections below:

a) Pipe class or strength designation

b) Manufacturer's name or trademark

c) Nominal pipe size

d) Green detector tape, 3 inches in width and clearly labeled "Sanitary Sewer" shall be 18" above all PVC and ductile iron pipe force mains.

3) Manhole Materials

a) Manholes shall be precast concrete. All manholes shall have eccentric cone sections. Precast concrete manholes shall meet ASTM C478 as to design and manufacture. The standard joint shall be sealed with a plastic cement putty meeting Federal Specification SS-S-00210, such as Ram-Nek or a butyl rubber sealant. All lift holes must be plugged with non shrinking grout after installation.

b) All manholes shall have 6 inch, 500 psi concrete bottoms resting on a minimum of 6 inches of # 57 stone. Sewer mains shall enter and exit radially through the manhole. Inverts shall be constructed with a width and height equal to 1/2 that of the effluent pipe and shall be so finished that a minimum energy loss occurs in the manhole. At each inlet and outlet of 8 inches or greater, compression connectors (flexible sleeves)

shall be cast into the manhole section. Flexible connectors are to be manufactured of high quality rubber or synthetic rubber and all strap clamps or draw bolts shall be stainless steel. Boots are to meet standards of ASTM C923. Rings and clamps are to meet standards of ASTM A167 and/or ASTM C923. Manholes located outside areas of the 100-year floodplain or high groundwater shall be treated through either coating, wrapping or some other approved method to prevent weepage or attack by acidic soils.

4) Manhole Frame and Cover Materials

a) Manhole Frames and Covers shall be cast or ductile iron with "Sanitary Sewer" stamped on the cover as indicated in the details. Ring and cover shall be stamped with make and model.

b) Castings shall be machined to give even and continuous bearing on the full length of the frame. Castings shall be free of porosity and blow holes. Manhole frames shall be bolted to the manhole. All manhole rings in roadways shall be encased in a concrete collar of 5000 psi concrete beneath the asphalt, with the cover flush with the top of pavement.

c) Watertight manhole frames and covers shall have neoprene gasket and machined bearing surfaces. Bolts shall be standard hexagonal-head, countersunk such that when fully tightened the bolt head is flush with the top of the cover. Only stainless steel tightening bolts shall be used. Castings shall be free of porosity and blow holes.

5) Step Materials

a) Manhole steps shall be furnished with the precast manhole sections. Steps shall be of polypropylene material reinforced with a 1/2 inch diameter reinforcing rod. Manhole steps shall be designed for a vertical load of 400 pounds and a horizontal pull out load of 1000 pounds. Steps shall be set 16 inches on center. Holes for the installation of manhole steps shall not project through the manhole wall, but shall stop a minimum of one inch from the outside wall. Steps shall be at least 12 inches clear width and shall project at least 5 inches from the wall into which they are embedded. Steps shall be located along the effluent side of the manhole. Cone or manhole top shall be oriented so that well with steps is vertical from over to shelf.

6) Bedding Materials

a) Sewer mains bedding in accordance with the Standard Details.

C. Installation Requirements

1) See design criteria for additional installation requirements.

2) Pipe trench excavation and backfilling shall be performed shall be in accordance with Section 206 of NYSDOT Specifications.

3) All excavations shall be adequately guarded with barricades and lights so as to protect the public from hazard. Streets, sidewalks, parkways and other public property disturbed in the course of the work shall be restored in a manner satisfactory to the town.

4) Transitions of pipe material shall occur only at manholes.

5) Sewer line easements shall be graded smooth, free from rocks, boulders, roots, stumps, and other debris and seeded and mulched upon the completion of construction.

6) The downstream side of the last manhole(s) of a sanitary sewer line extension under construction shall be plugged with a non pneumatic plug and secured with stainless steel chain or wire rope to prevent the passage of groundwater, runoff and sediment into the sanitary sewer system. All water upstream of the plug shall be pumped out of the sanitary sewer line and all sediment and solids shall be removed and properly disposed of by the Contractor. The plug shall not be removed until the line has been inspected by the Town to insure that all possible points of inflow or infiltration have been eliminated. Failure to meet these requirements will be deemed a violation of the Sewer Use Ordinance with fines up to $1,000.00 per day.

7) Ductile Iron Pipe shall be installed in accordance with the Ductile Iron Pipe Handbook published by DIPRA and AWWA C500.

D. Additional Requirements for Flexible and Semi-Rigid Pipe

1) PVC is classified as "Flexible" pipe, and A.B.S. Composite and PVC Composite are classified as "Semi-rigid."

2) The installation shall satisfy the requirements of the manufacturer, and/or the following, whichever is more stringent.

a) The manufacturer's specifications or other approved method shall be used in determining the stiffness class of the pipe to be installed so as to attain the required deflection control. The class of the pipe must be approved by the Town Engineer prior to installation.

b) For PVC pipe, the pipe shall be produced with bell and spigot end construction. Joining shall be accomplished by rubber gasket in accordance with manufacturer's recommendation, unless otherwise directed or approved by the Town Engineer. Flexible watertight elastomeric seals in accordance with ASTM D3212-1 may also be used. Each pipe length shall be clearly marked with information including pipe size, profile number and class number.

d) Installation of PVC pipe shall follow the recommendations of ASTM D-2321 "Underground Installation of Thermoplastic Pipe for Sewers and other Gravity-Flow Applications". For flexible pipes, bedding and embedment material shall be Class I. In any area where the pipe will be installed below existing or future ground water levels or where the trench could be subject to inundation, additional Class I material shall be used for bedding.

3) Bedding and embedment material classifications shall be defined as follows:

a) CLASS I - Angular, (1/4 to 1-1/2 inch) graded stone, including a number of fill materials that have regional significance such as crushed stone or crushed gravel.

b) CLASS II - Coarse sands and gravels with maximum particle size of 1-1/2 inch, including variously graded sands and gravels containing small percentages of fines, generally granular and non-cohesive, either wet or dry. Soil types GW, GP, SW and SP are included in this class.

c) CLASS III - Fine sand and clayey gravels, including fine sands, sand-clay mixtures, and gravel-clay mixtures, Soil Types GM, GC, SM, and SC are included in this class.

d) CLASS IV - Silt, silty clays, and clays, including inorganic clays and silts of medium to high plasticity and liquid limits. Soil Types MH, ML, CH and CL are included in this class. These materials are not recommended for embedment.

e) The minimum trench width shall be one pipe diameter plus 9 inches on each side of the pipe.

f) The bedding (6" minimum) and embedment materials shall be in accordance with ASTM D-2321. The embedment materials shall be installed from trench wall to trench wall and from the invert to a minimum of 6" above the crown of the pipe.

g) The bedding and embedment material shall be compacted to a minimum of 90% Standard Proctor density for Class I materials.

h) The maximum allowable deflection after installation shall BE LESS THAN 5% for flexible pipe and 3% for semi-rigid. A mandrel test on truss pipe shall only be required if the Inspector finds a problem during the visual inspection.

i) If hydraulic jack shoring is utilized for trench walls, it shall be restricted to the area just above the top of the pipe. This will ensure the embedment materials and pipe will not be disturbed when the shoring is removed.

1.03. FORCE SEWER MAINS

A. Design

1) Main Location

a) Force mains shall be installed with a minimum cover of 4 feet measured from the top of the pipe to the finished subgrade.

b) Force mains shall be installed in dedicated public right of way or in dedicated utility easements as follows:

Pipe Size	Pipe Depth	Easement Width
12” and less	Less than 20’	20’
12” and less	Greater than 20’	30’
Greater than 12”, up to 24”	Less than 20’	30’
Greater than 12”, up to 24”	Greater than 20’	40’
Greater than 24”	All depths	Town Engineer Specified

c) Force mains shall discharge at the invert of the receiving manhole and shall be as close as possible to 180 degrees from the outlet pipe.

d) Sewage Combination Air Valves shall be installed at all the high points or runs exceeding 3000’ of all force mains in accordance with the Standard Details. The valve size shall be determined by the designer and approved by the Town Engineer.

e) Force main valves shall be resilient-seated wedge gate type spaced as determined by the Town Engineer. Resilient-seated wedge gate valves shall be manufactured in accordance with AWWA C509.

B. Materials

See Section 2.02 for instructions on requesting new product approval.

1) Pipe Materials

a) Force mains smaller than 4 inches in diameter shall be PVC or HDPE, while larger pipes shall be DIP. Pipe and fittings within pump stations shall be ductile iron. All non ductile iron pipe shall be installed with a 10 AWG plastic insulated tracer wire.

b) Ductile Iron Pipe shall be designed and manufactured in accordance with AWWA C150 and C151 for a laying condition Type 2. Pipe joints shall be of the push-on type per AWWA C111. Pipe lining shall be cement mortar with a seal coat of bituminous material, all in accordance with AWWA C104. Working pressure shall be as follows:

4" - 12"	350 p
14" - 20"	250 p
24"	200 p
30" - 54"	150 p

c) PVC Pipe Force mains smaller than 4 inches in diameter shall be SDR 21 or schedule 40 PVC premiere pipe with push joints. Pipe and joints shall meet all applicable requirements of ASTM D-2241 and D-1785. PVC pipe requires the installation of 3 inch wide detector tape a maximum of 2 feet below the finished grade.

2). Pipe Fitting Materials

a) Pipe fittings shall be cast or ductile iron designed and manufactured per AWWA C110. Fittings up to and including 12 inches shall be designed for an internal pressure of 250 psi. Fittings larger than 12 inches shall be designed for an internal pressure of 150 psi. Joints for fittings shall be mechanical joint and shall be cement mortar lined with a seal coat of bituminous material, in accordance with AWWA C104.

b) All buried DIP and fittings shall have bituminous coating on the exterior surface in accordance with AWWA C151.

c) Pipe shall be supplied in minimum 18-foot lengths unless approved otherwise by Department of Development Services.

3) Material Identification

a) Force mains shall be appropriately identified upon installation so they will not be confused with potable water lines. Green warning tape 3 inches in width and clearly labeled sanitary sewer shall be laid a maximum of 2 feet below the finished grade.

b) Force main valves shall have valve box covers marked "Sewer".

4) Manhole Materials

See section 7.02 B-3 for manhole material requirements.

C. Installation

1) See design criteria contained in Section 7.02 A for additional installation requirements.

2) Reaction blocking for all fittings or components subject to hydrostatic thrust shall be securely anchored of 3000 psi concrete thrust blocks poured in place. The reaction areas are shown in the Standard Details. No concrete shall interfere with the removal of fittings.

3) The receiving manhole for a force main shall receive an interior coating of Koppers "Super Service Black" or a PVC or resin lining with a total dry film thickness of 10 mils. All nicks and scratches shall be touched up prior to acceptance of the manhole.

4) Manholes containing valves shall receive a PVC or resin lining or a bituminous or coal tar epoxy coating on the interior.

1.04. SERVICE CONNECTIONS

A. General Requirements

1) No unauthorized person shall uncover, make any connections with or opening to, use, alter or disturb any public sewer or appurtenance thereof without first obtaining a written permit from the Building Inspector.

B. Design

1) All residential subdivision lots shall be served by gravity unless otherwise approved by the Town Engineer. If a pump is approved, it shall be privately maintained, must pump into a service connection placed on the lot, and must have a note on the recorded plat indicating that a private pump is required to serve the lot.

2) Service connections to the main lines shall be perpendicular to the main line and to the edge of the right of way or easement line.

3) Cleanouts are required on all services with a maximum spacing of 75 feet on 4 inch services and 100 feet on 6 inch services, and at the right of way line or edge of easement. All cleanouts shall extend a minimum of 6 inches above finished grade or meet the optional cleanout method requirements in accordance with the Standard Details.

4) Sewer cleanouts located in paved areas, which bear vehicle loading, must have ductile iron risers, ductile iron fittings and brass caps or meet optional cleanout method requirements in accordance with Standard Details.

5) All 6 inch or larger service connections shall be into a manhole unless otherwise approved by the Town Engineer.

6) All service lines which are connected into manholes shall not be through the cone section or manhole joints. Service lines shall be installed 6" above, but no more than 24 inches above the invert or shall be installed with a standard drop. Multiple service connections shall not be maintained by the Town. The use of wyes in the line is preferred over the use of service saddles.

C. Materials

1) Pipe Materials

a) PVC Pipe shall be schedule 40/SDR 21 or greater supplied in 18 feet lengths. The pipe may be joined by elastomeric gaskets.

b) Ductile Iron Pipe shall be used for sanitary sewer with services with less than 3 feet of cover or in excess of 20 feet of cover.

2) Service Saddle Materials

a) PVC or ABS service saddles shall be of the same material as the main, and shall be solvent welded and fastened with double stainless steel bands.

b) Ductile Iron Pipe service saddles may be "ROMAC C" type consisting of a virgin SBR gasket compounded for sewer service, a ductile iron saddle casting, a 304 stainless steel adjustable strap for fastening the gasket and the saddle casting to the sewer main and a 304 stainless steel adjustable circle clamp for securing the service line into the SBR gasket.

D. Installation

1) See design criteria contained in Section 7.03 A for additional installation requirements

2) Each separately owned structure requires a separate tap to a public sewer.

3) All service connections to existing sanitary sewer mains shall be made by the Contractor under supervision of the Town. Service connections on new mains may be by the Contractor, but must include the use of wye connections.

4) Service taps into mains shall be made on the top quarter of the main with the wye saddle angled towards the direction of flow in the main.

5) Four inch lines shall have a minimum slope of 1.0 ft/100 ft and 6 inch lines shall have a minimum slope of 0.60 ft/100 ft.

6) Service connections to existing sewers made using a "ROMAC CB" sewer saddle shall be made only when the service line is iron pipe and only when the sewer main is 8", 10", or 12" diameter concrete, ductile iron, or PVC sewer pipe. This service connection shall not be used when the sewer main material is truss sewer pipe. The opening in the sewer main for the "ROMAC CB" sewer saddle shall be cut with a hydraulically or pneumatically driven circular tapping saw of the same nominal diameter as the sewer service line.

1.05. WASTEWATER PUMP STATIONS (TO BE DEDICATED TO TOWN)

A. General Requirements

1) Pump station manufacturer shall be provided by manufacturer standardized by Town.

2) All pump stations shall be designed to meet the most current Recommended Standards for Wastewater Facilities.

3) All pump stations shall be reviewed and approved by the Town Engineer.

4) Pump station controls shall be supplied with each pump station and shall be completed by the integrator the Town of Erwin has standardized upon. All costs shall be paid by the individual requiring the installation of the pump station.

5) Hydraulic calculations shall be provided with each pump station design to assess the hydraulic requirements and resulting impacts on downstream Town of Erwin wastewater infrastructure, including but not limited to the municipal wastewater collection system, downstream pump stations and wastewater treatment plant.

6) All wastewater pump station designs shall be include an evaluation of impacts resulting from odor. The design shall include odor control as needed or as required by the Town of Erwin.

7) An emergency backup generator shall be provided with any pump station erected and dedicated to the Town of Erwin.

8) The installer of the wastewater pump station shall provide start up of all pumps, controls, emergency backup devices, etc.

1.06. INSPECTION, TESTING AND REPAIR

The Contractor shall furnish all materials, labor, and equipment to perform all testing. Water for testing purposes will be provided by the Town and arranged for by the Contractor.

A. Visual Inspection

1) All materials used must be approved by the Town prior to installation. Rejected materials shall be immediately removed from the job.

2) Gravity sanitary sewer lines shall be clean and free from obstructions, and shall be visually inspected from every manhole. Lines which do not exhibit a true line and grade or which have structural defects shall be corrected. Sanitary sewer service connections shall be visually inspected prior to backfilling.

B. Air Testing

1) Low-pressure air testing shall be performed before all laterals or stubs are installed on the line, and after the trench has been backfilled to finished grade. Plugs shall be installed at each manhole to seal off the test section. The line will be pressurized with a single hose and monitored by a separate hose connection from the plug. Air then shall be slowly introduced into the sealed line until the internal air pressure reaches 5.0 psig. The air pressure shall then be allowed to stabilize for a minimum of 2 minutes at no less than 4.5 psig (plus groundwater pressure, if any). When the pressure reaches 4.5, the time required for the pressure to drop 1.0 psi will be observed and recorded. The line shall be "acceptable" if the pressure does not drop more than 1.0 psi in the time prescribed for the test in the Sanitary Sewer Air Test table found in the Details.

2) If the section fails to meet these requirements, the source of leakage shall be repaired and the pipe section re-inspected

3) The Inspector may require that an infiltration test be performed that shall not exceed 100 GPD/inch/mile.

4) See Section 7.01D for additional testing requirements for flexible and semi-rigid pipe.

C. Mandrel Testing

1) The mandrel (go/no-go) deflection test must be performed on each line prior to acceptance, and no less than 30 days after installation. The Contractor shall supply the mandrel used for this performance test. The mandrel device shall be cylindrical in shape having 9 possible contact points with the pipe. The mandrel's length and diameter (ID of proving ring) shall be in accordance with the following tables, and shall be subject to the Town's approval.

2) For flexible pipes other than Polyethylene the following shall apply:

Nominal Diameter (in)	Proving Ring Minimum Length (in)	Diameter Mandrel (in)
6	6	5.65
8	8	7.40
10	10	9.31
12	10	11.22
15	12	14.09

For semi-rigid pipes the following shall apply:

Nominal Diameter (in)	Proving Ring Minimum Length (in)	Diameter Mandrel (in)
8	8	7.52
10	10	9.46
12	10	11.40
15	12	14.31

D. Hydrostatic Testing

1) The force main shall be completely filled with water, all air shall be expelled from the pipe, and the discharge end of the pipeline shall be plugged and adequately blocked before the hydrostatic test begins.

2) The force main shall be tested to a pressure of 150 psi or three times the rated Total Dynamic Head of the pumps in psi, whichever is larger, as measured at the lowest elevation of the pipeline, for a duration of 2 hours. The pressure gauge used in the hydrostatic test shall be calibrated in increments of 10 psi or less. At the end of the test period, the leakage shall be measured with an accurate water meter. All visible leaks are to be repaired regardless of the amount of leakage.

Pipe Size Allowable Leakage	
Pipe Size	Gallons (per 1000 ft of pipe)
4	0.85
6	1.28
8	1.70
12	2.56

E. Repairs

1) All repairs shall be supervised by the Town of Erwin.

2) Vitrified Pipe - replace damaged section with D.I.P. and install a Fernco coupling at each end encased in concrete.

3) PVC Pipe - replace damaged section with PVC Pipe and install a Fernco coupling at each end encased in concrete.

4) All repairs to damaged sanitary sewer lines shall be backfilled with Class I bedding material identified in section 7.02 (D) (3). Contractor shall provide suitable Class I bedding beneath the proposed repair to prevent future settling.

.

SECTION 8.00

STORM DRAINAGE

8.01. DESIGN

A. Location

1) All public storm sewers shall be installed in right of way or easements. Minimum easement widths shall be 20 feet for pipes up to and including 48 inches in diameter, and 30 feet for pipes greater than 48 inches in diameter.

2) See Sections 6.00 and 7.00 for horizontal and vertical separation requirements between storm drainage pipe, water lines, and sanitary sewer lines.

3) The Town shall maintain only the storm sewer systems within Town maintained right of way and on Town property. All others shall be maintained by the property owner(s).

4) Discharge points shall be a minimum of 10 feet downhill from the building envelope and shall not discharge on to a public street.

5) Structures shall be spaced to intercept flow at the uphill turnout of intersections unless the street design provides a continuous downhill grade around the radius and down the intersecting street.

6) Stormwater inlets shall not be placed within travel areas of roadways or parking lots.

7) Wet detention ponds shall reference and adhere to standards set forth by the Stormwater Design Manual. Additional requirements by the Town of Erwin require a maximum 3:1 slopes on all sides of the ponds, unless exempted by the Town Engineer.

8) Junction boxes shall not be used as curb inlets.

B. Sizing

1) Systems shall be designed based on rainfall intensities of the 10 year storm event for street drainage pipe sizing and the 100 year storm for flood plain areas.

2) Curb inlets shall be spaced to provide a maximum spread of 8 feet for the design storm. In areas of heavy pedestrian traffic, the maximum allowable spread may be decreased by the Town Engineer.

3) Runoff rates shall be calculated by the Rational Method (for drainage areas less than 2 square miles), SCS Method (for drainage areas greater than 2 square miles), or other acceptable procedure. Runoff computations shall be based on rainfall data published by the National Weather Service for this area.

4) Time of concentration (t_c) shall be determined using TR-55 and TR-20 Methodology.

5) Pipe shall be sized in accordance with the Manning Equation and applicable monographs to carry the design flow and to provide a velocity of at least 2 feet per second during the 2 year storm.

6) Culverts shall be sized in accordance with the Energy Equation and applicable monographs to carry the design flow and to provide a velocity of at least 2 fps during the 2 year storm.

7) The minimum pipe diameter shall be 12 inches where the inlet is grated and 15 inches where the inlet is not grated.

8) Pipe shall be installed to provide a true line and grade between structures.

9) Structures shall be installed at each deflection of line and/or grade.

10) The maximum length between access points shall be 300 feet for all pipe sizes.

11) No inaccessible storm drainage structures shall be allowed.

12) Channels and ditches shall be designed to carry the design flow at nonerosive velocities. Calculations indicating design velocities shall be provided along with typical channel cross-sections. The maximum allowable design velocity in grass channels is 4 feet per second.

13) Calculations on Hydraulic Grade Line (HGL) shall be performed and submitted for approval on entire storm drain system.

8.02. MATERIALS

A. Pipe Materials

High Density Polyethylene Corrugated Pipe (HDPE), unless otherwise approved by the Town Highway Superintendent, shall be used in areas of public right-of-way and easements. Location shall be shown on plans and shall be installed according to ASTM D2321 standards. Pipe shall adhere to ASTM F2648 and have a smooth interior.

B. Structure Materials

All storm drainage structures such as manholes, inlets, junction boxes and catch basins shall be constructed.

1) Precast Concrete Manholes shall meet ASTM C478 as to design and manufacture. All manhole cones shall be the eccentric type. Joints shall be sealed with a plastic cement putty meeting Federal Specification SS-S-00210, such as Ram-Nek or a butyl rubber sealant.

2) Manhole Frames and Covers shall be as specified with "STORM SEWER" stamped on the cover and two 1 inch holes.

3) All structures shall be provided with a concrete adjusting ring (shim) having a height of 4 inches or as otherwise approved by the Town of Erwin Highway Superintendent.

4) Steps shall meet the material, strength, and installation requirements as specified Location of steps for storm drainage shall be per NYSDOT Standards.

5) Headwalls and Endwalls may be constructed in accordance with NCDOT details, or precast concrete with wing walls and apron by an approved manufacturer. Installation of precast headwalls and endwalls shall be in accordance with the manufacturer's recommendations.

C. Installation

1) A reinforced concrete slab designed by an engineer may be used at oversized structures to adjust an inlet to standard dimensions. They must meet H2O loading.

2) The minimum cover for storm sewer pipe shall be 1.5 feet to finished subgrade under roads and 1 foot to finished grade in non load-bearing areas. Trench excavation and backfilling shall be in accordance with NYSDOT and OSHA Specifications.

3) Pipe shall not project into a drainage structure but shall be finished flush with the inside of the structure.

4) Catch basins between 8 and 20 feet in depth shall have minimum interior dimensions of 4 feet by 4 feet, and those over 20 feet in depth shall have minimum interior dimensions of 5 feet by 5 feet.

5) Each drainage structure shall have a sump equal to 12 inches in depth below the lowest invert. Precast headwalls and endwalls shall only be installed at single pipe culverts or as otherwise approved by the Town of Erwin Highway Superintendent.

D. Inlets and Outlets

1) Headwalls, endwalls or flared end sections shall be installed at all discharge points, and inlets where there is not a structure.

2) Flared end sections shall be installed on single pipe culverts up to and including 60 inches in diameter, and on multiple pipe culverts up to and including 36 inches in diameter.

3) Headwalls and endwalls shall be installed on single pipe culverts greater than 60 inches in diameter, and on multiple pipe culverts greater than 36 inches in diameter.

4) Energy dissipaters shall be installed at all discharge points and shall be properly sized to ensure that stormwater is released at a non-erosive velocity.

5) A fabric or washed stone barrier shall be installed between dissipation pads and the natural ground.

6) The system shall include scour protection for drainage ways.

7) Additional information on the impact of stormwater discharge onto adjacent properties may be required by the Town.

8.03. INSPECTION AND TESTING

The contractor shall furnish all materials, labor, and equipment to perform inspections of storm drainage.

A. Visual Inspection

1) All materials used must be approved by the Inspector prior to installation. Rejected materials shall be immediately removed from the job.

2) Storm drain lines shall be clean and free from obstructions and shall be visually inspected from every structure or opening. Lines which do not exhibit a true line and grade or which have structural defects shall be corrected.

SECTION 9.00

PRIVATE UTILITIES

9.01 GENERAL REQUIREMENTS

All private utilities installed on Town property or within a Town of Erwin right-of-way shall be completed only at the risk of the Owner. The Town of Erwin will not issue an easement for placement of said utilities on their property or within their rights-of-way and therefore, can require these utilities be relocated at any time.

All work completed in Town of Erwin rights-of-way shall obtain a Highway Work Permit, provide the necessary insurance requirements, provide detailed engineering drawings, complete as-built documentation, etc.

9.02 DESIGN REQUIREMENTS

A. Prior to submission of the Highway Work Permit, the applicant or their engineer shall hold a pre-design meeting with the Town of Erwin.

B. Engineering Drawings
Three (3) copies of detailed engineering drawings shall be provided to the Town prior to issuance of the Highway Work Permit. Detailed engineering drawings shall depict the work to be completed as well as contain the following:

1. Project Location
2. North Arrow & Legends
3. Construction limit lines
4. All existing utilities appropriately labeled including utility locations, utility inverts, etc.
5. All proposed work and method of construction (i.e. construction details) clearly labeled,
6. Identification of all property boundaries, roadway rights-of-way, and easements,
7. All existing and proposed roadways and sidewalk along with appropriate features (edge or shoulder, edge of road, edge of pavement, curb, etc.) clearly labeled.
8. Proposed restoration clearly labeled

C. All method of installation of any private utility shall be governed by their respective professional agencies or industry standards. Any documentation supplied to the Town of Erwin shall clearly indicate compliance with any and all applicable installation standards or guidelines.

D. Utility company proposing to install new utilities shall demonstrate on plans consideration of potential future utilities that may not be currently installed or servicing the proposed area. For instance, if an area is currently not serviced by municipal sanitary sewer, future private utilities shall not simply install their individual utilities along the path of least resistance without giving consideration to such potential future utilities and any associated installation or separation distance requirements.

E. If a contractor proposes to utilize directional drilling methodology, this shall be clearly indicated on the engineering drawings along with the proposed installation depth and invert elevations of all utilities the directional drill shall cross. All directional drilling or trenchless technology shall be completed following applicable national standards.

F. The Town of Erwin reserves the right to complete an independent review of all proposed private utility installations on Town property or within Town rights-of-way. This review may consist of securing a third party reviewing agency. All costs associated with completing these reviews shall be paid for by the Owner of the proposed utility.

G. Any private utility installed in parallel to a municipal or public utility shall maintain a separation distance of four (4) feet as measured from edge of utility to edge of utility unless otherwise approved in writing by representative of the applicable utility.

H. No private utility shall cross a public utility or roadway at an angle of less than 45 degrees.

I. Private utilities shall not encumber any Town of Erwin right-of-way with two utilities located with the same right-of-way and serving a similar function. For instance, two gas distribution pipes or two electric distribution lines shall not be located within the same roadway right-of-way.

9.03 PERMITTING REQUIREMENTS

A. A highway work permit shall be obtained prior to commencement of any work within any Town right-of-way.

B. The contractor shall not commence work until all necessary permits (i.e. NYSDEC, US Army Corps of Engineers, NYSDOT, etc.) to complete the complete project are in hand and copies of all acquired permits provided to the Town of Erwin.

C. The contractor shall not complete any work within any Town of Erwin rights-of-way until all easements necessary to complete the project are identified and obtained and sufficient documentation provided to the Town expressing acquisition of said easements.

9.04 CONSTRUCTION REQUIREMENTS

A. The Town of Erwin reserves the right to require a preconstruction meeting with the Owner and any of its contractors prior to commencement of any work to review the proposed work, review project scheduling, and obtain contact information for key parties involved.

B. The Town of Erwin reserves the right to complete inspection of all work performed in the Town's right-of-way as a condition of all Town permits issued. Contractor shall make the necessary accommodations to allow for any Town inspections.

C. The Owner and its contractors shall ensure that all applicable local, state or federal laws are strictly adhered to regarding all job safety.

D. All maintenance and protection of traffic shall comply with the current New York State Highway Design Manual (Chapter 16) and New York State Department of Transportation Standard Sheets (All Standard Sheets beginning with 619).

E. Staging & stockpiling of material and equipment shall not occur within the Town right of way.

F. No open cutting of public roadways shall be allowed unless approved in writing by the Town of Erwin Highway Superintendent

G. If trenchless technologies are employed to install a private utility, the Owner shall be responsible for ensuring that no other subsurface utilities have been compromised in the process. This shall include but not be limited to televising all crossings of the new utility with any subsurface sewer piping or structures.

H. No private utility shall be placed below grade within a public right-of-way without some method of providing suitable utility detection. This shall include, but not be limited to, detectable warning tape, tracer wire, etc.

I. No cathodic protection measures shall be installed within the Town of Erwin right-of-way that may result in the degradation of any existing Town of Erwin infrastructure. It cathodic protection measures are absolutely required, the Utility company shall make improvements to the Town's infrastructure at their own cost to prevent any adverse impact.

J. If any unforeseen conditions may arise during the installation of the private utility that results in a need to realign said utility, the Owner shall provide updated drawings or otherwise acceptable documentation of any revised alignments prior to installation.

K. Utility Poles

1. All poles shall be set outside the ditch line so that the proper drainage of the highway will not be impeded. Any alternative placements must be approved by the Town of Erwin or their designee
2. There shall be no obstruction to private driveways, connecting highways or roads, paths or sidewalks.
3. In case it is found necessary to trim trees within the boundaries of the highway, the least possible amount shall be done, and in all cases the consent of the abutting property owner must be secured before the poles are set and trees trimmed.
4. Poles shall be of sufficient length to provide a clearance for wires of not less than eighteen feet over the crown of the highway, under the worst conditions for temperature and loading. They shall be set in line and properly plumbed. They shall be well-guyed. No guying to trees. Special precautions shall be taken on curves and where lines cross from one side of the highway to the other. Poles shall be straight, sound, and the fittings shall be of sufficient strength to carry wires under the worst condition of loading.
5. Where telephone wires cross high tension power lines or electric lights, special precautions shall be taken to maintain proper clearance under the worst condition of temperature and loading.
6. If necessity arises in the future, because of work on the highway, to relocate, replace or reset poles, cables or conduits, said work shall be done at the expense of the Responsible Party/Joint Applicant.

9.05 CONSTRUCTION CLOSE-OUT REQUIREMENTS

A. Upon completion of the private utility installation, the private utility owner shall provide the Town of Erwin as-built documents in hard copy format and electronic PDF format. As per the requirements of the As-Built Document Section 10.00 of this Standard Specification Manual.

B. Owner shall provide the Town of Erwin with any and all testing or inspection reports completed as part of the utility installation.

C. Town of Erwin shall conduct a walkthrough of the project site to review of all work/restoration within the roadway right-of-way by the Town of Erwin Highway Superintendent or their designee.

9.06 TESTING OR INSPECTION OF EXISTING SUBSURFACE

A. Any disturbance within the Town of Erwin roadway right-of-way, including but not limited to, coring/drilling of pavement, excavation, etc., shall require a highway work permit to be submitted. Any disturbance of the Town of Erwin roadway surface shall be restored to existing conditions or better than existing conditions.

B. If emergency testing is required and a highway work permit cannot be completed in sufficient time, the appropriate utility shall notify the Town of Erwin within 24 hours after testing is complete. The utility company shall be responsible to complete a highway work permit for record keeping only unless other documentation is submitted that is suitable to the Town's repreasentative.

SECTION 10.00

AS-BUILT CHECK LIST

All entities who construct public waterlines or facilities, public sanitary sewer lines or facilities, or streets to be publicly maintained or private streets and travel lanes shall submit to the Town of Erwin, certified as-built set of construction drawings, signed and sealed by NYSPE and/or NYSPLS as a part of the Town's acceptance process. **As-builts must be submitted prior to acceptance of the improvements or issuance of a certificate of occupancy.** The following check list must be attached to each set of as-builts submitted for approval. Each blank must be initialed by the applicant as being included on the as-builts or marked N/A if not applicable to the project. All plan sheets must be 24" X 36" mylar or vellum. Lettering shall be bold, clear and a minimum of 1/8" in height. All applicable information listed below must be included on all as-built drawings.

9.01. AS-BUILT INFORMATION

Submitted by _____ Phone # _____

(Please check)

[ ] Blue Line For Review Only

[ ] Mylar or Vellum (Final)

Transmittal Date _____

9.02. SITE DATA Page # _____

[ ] Acreage in total tract

[ ] Lot size

[ ] Total number of lots

[ ] Total linear footage of infrastructure chart, Page # _____

- [ ] Streets (List individually in lengths)
- [ ] Water mains (Identify size and length)
- [ ] Sewer mains (Identify size, inverts and length)
- [ ] Number and location of valves (For each size)
- [ ] Number and location of fire hydrants
- [ ] Number and location (invert for all pipes) of manholes
- [ ] Other (Any additional appurtenances)

9.03. GENERAL INFORMATION Page # _____

[ ] Copy of recorded plat or deed of easements, indicating easements and right of way

[ ] Boundary of tract by courses and distance with references

[ ] Tie to NY grid coordinate system

[ ] 500 scale vicinity map

[ ] Scale of drawings and bar scale

[ ] North arrow

[ ] Location of benchmark with M.S.L. elevations

[ ] Seal and signature of New York registered P.E. or P.L.S. on each sheet that performed as-built

[ ] All easements identified and dimensioned

[ ] Statement designating drawings are "as-built" on each sheet

9.04. STREETS (Public or Private) Page # _____

[ ] Horizontal alignment with radii, P.C.'s, and P.T.'s of all curves

[ ] Vertical alignment with centerline grades, vertical curve lengths and station and elevation of all PVC's and PVT's and centerline profile.

[ ] Dimensioned right of way and street widths

[ ] Pavement section

[ ] Typical cross section

[ ] Horizontal and vertical sight lines

[ ] Delineation of landscaping limits and materials

9.05. STORM DRAINAGE Page #_____

[ ] Outline of 100 year flood plain

[ ] Pipe material

[ ] Structure invert and top elevations

[ ] Pipe size

[ ] Pipe slope and distance

[ ] Size of riprap dissipation pad

[ ] Statement of stormwater velocity at all outlets

[ ] Show permanent stormwater best management practice

[ ] A separate, recorded easement dedication plat for utility extensions outside right of way

[ ] Maintenance agreement responsibility statement

9.06. WATER SYSTEM Page #_____

[ ] Pipe material labeled

[ ] Pipe size labeled

[ ] Separation from sanitary and storm sewer shown on plans

[ ] Locations with distance references (2 each per appurtenance)

- [ ] Valves
- [ ] Fire hydrants
- [ ] Blow-offs
- [ ] Meters
- [ ] Air release valves

[ ] Certification by NYPE of construction in accordance with the water extension permits

- [ ] Certification on the plans
- [ ] A separate certification sheet is provided

[ ] A separate, recorded easement dedication plat for utility extensions outside right of way

9.07. SANITARY SEWER SYSTEM Page #_____

[ ] Pipe material labeled

[ ] Pipe size labeled

[ ] Manhole top elevations

[ ] Invert in and out elevations

[ ] Pipe slope

[ ] Locations with distance references (2 each appurtenance)

- [ ] Clean outs
- [ ] Air release valves
- [ ] Manholes
- [ ] Force main valves

[ ] Horizontal control (angles at manholes)

[ ] 100-year flood plain elevation

[ ] Certification by NYPE of Construction in accordance with sanitary sewer extension permits

- [ ] Certification on the plans
- [ ] A separate certification sheet shall be provided

[ ] A separate, recorded easement dedication form for utility extensions outside right of way

Town of Erwin Use Only

As-Builts Reviewed by _____Date_____

Approved _____Returned _____

SECTION 11

PERMITS AND FORMS

PERMIT # **ID**_____ DATE_____

TOWN OF ERWIN

DEMOLITION PERMIT

GRANTED TO: _____

ADDRESS OF PROPERTY TO BE DEMOLISHED:

_____

DATE OF DEMOLITION: _____

TOWN SEWER & WATER: YES _____ **NO** _____

WELL & SEPTIC: PLAN FOR CLOSURE: _____

_____

_____

DEBRIS TO BE REMOVED TO: _____

_____

CONTACT PERSON: _____

ADDRESS & PHONE: _____

APPROVED BY: _____ **DATE:** _____

TOWN OF ERWIN WELL ABANDONMENT FORM

DATE: _____

CONTRACTOR NAME: _____

CONTRACTOR ADDRESS: _____

CONTRACTOR (PHONE #, FAX, CELL): _____

WELL OWNER'S NAME: _____

ADDRESS OF WELL: _____

DEPTH OF WELL: _____

SIZE OF WELL: _____

LOCATION OF WELL TO HOUSE: _____

AUTHORIZED BY: _____

Please describe distance and location of well with diagram below:

House

*** Form must be returned to Town of Erwin**

METHOD OF PERFORMING UTILITY WORK
WTIHIN THE TOWN OF ERWIN RIGHT-OF-WAY

I. GENERAL CONDITIONS

These conditions and regulations apply to Highway Work Permits authorizing utility work within the Town of Erwin right-of-way. Town of Erwin offices are located at 310 Town Center Road, Painted Post, NY 14870. The Town of Erwin shall be represented by the Town Manager and/or their appointed designee(s).

A. TIME

Work under the permit shall commence and be completed within the dates listed under anticipated duration of work on the permit application. Work shall begin within (30) days from the date of permit issuance unless a later starting date is approved by the Town of Erwin or their designee.

B. REQUIREMENTS

All work shall be completed in accordance with the current Town of Erwin Standard Specifications entitled "Highway and Utility Construction" and in accordance with the following standards and requirements: Occupational Safety and Health Administration, Federal Department of Labor, Safety and Health Standards (29 CFR 1926/1910): Part 131, Title 17, New York Code of Rules and Regulations, Accommodation of Utilities Within State Right-of-Way; New York State Department of Labor, Industrial Code Rule 23, Protection of Persons Employed in Construction and Demolition Work; Industrial Code Rule 53, Excavation and Demolition Operations At or Near Underground Facilities; New York State Department of Transportation (NYSDOT) Standard Specifications and The Manual on Uniform Traffic Control Devices (MUTCD).

C. MAINTENANCE AND PROTECTION OF TRAFFIC

1. Traffic is to be maintained at all times during the progress of this work. The proper signs, barricades and lights shall be provided in accordance with the provisions of the MUTCD.
   A maintenance and protection of traffic plan may be required. No lanes shall be closed without prior approval.
2. The Responsible Party/Joint Applicant shall erect and maintain suitable barricades around all trenches while work is in progress for the protection of the public, and they shall be suitably lighted by yellow flashing lights at night. The work shall be carried out in such manner that not more than 100ft of trench remains open at the end of the day's work.
3. No road surface cuts are to be left unfilled over night, except in emergencies, and in such cases, adequate precautions must be exercised to protect traffic. Prior approval must be obtained to use steel plating.
4. No construction materials or equipment shall be left on the shoulders or road surface after working hours, nor shall any construction equipment or material be placed in any manner or location that will obstruct highway or railroad warning signs.
5. All open trench in the highway right-of-way shall be barricaded. There shall be conspicuously displayed bright orange flags no less than 24" x 24" attached to such barricades and illuminated with flashing yellow lights. If, in the judgment of the Town of Erwin or their designee, flagmen are necessary, they shall be employed by the Responsible Party/Joint Applicant and on duty at all times during the progress of work .
6. 'Soft Shoulder' signs of adequate size, not less than 24" square, shall be erected and maintained on all backfill trenches within the shoulder area until the backfill is thoroughly settled. These signs shall be located at the beginning of each section of work, at intersections, and at a distance not greater than 1000' apart.
7. During winter conditions, highway shoulders shall be maintained free of obstructions which would interfere with snow removal and ice control.
8. The Responsible Party/Joint Applicant shall keep the traveled way free of foreign objects such as rocks, timber and other items that may fall from transporting vehicles. Spillage of material carried by

or dropped by carrying vehicles or equipment used by the Responsible Party/Joint Applicant shall be removed immediately from the traveled way, both within and outside the project work limits.

D. NECESSITATED FUTURE WORK

1. The Responsible Party/Joint Applicant agrees that any present or future injury to or disturbance of The highway its slopes or ditches, caused by the method of work performed or the facility installed shall be repaired by the Responsible Party/ Joint Applicant at his own expense and in accordance with the requirements of the Town of Erwin.
2. If necessity arises in the future because of the work on the Town of Erwin Highway system and/or its structures, requiring the removal, relocation or replacement of the installation authorized by this permit, said work shall be done as directed by the Town of Erwin or their designee, and all cost and expense so incurred shall be the obligation of the said Responsible Party/Joint Applicant or his successor in interest.

E. FUTURE RESPONSIBILITY

Applicant or contractor completing work within the Town of Erwin right-of-way is responsible for warranting the restoration for 1 year following the completion of said work.

II. SPECIAL CONDITIONS & SUPPORTING DOCUMENTATION

In addition to the aforementioned conditions, if it is found necessary by the Town of Erwin to add or otherwise modify the same, it is to be understood such changes shall form a part of the permit and be complied with immediately upon notice. Any approved changes to the Town Standard Specifications and supporting documentation shall be listed below:

TOWN OF ERWIN
HIGHWAY/UTILITY WORK PERMIT
PERMIT #_____

Application as Responsible Party is hereby made for a highway/utility work permit by:

Name_____

Address_____

City_____ State_____ Zip_____

Federal I.D. No. _____

Applicant Telephone No._____

Applicant Fax No._____

Applicant E-Mail_____

For Joint Application, Name and Address of Additional Applicants below:

Name_____

Address_____

City_____ State_____ Zip_____

Federal I.D. No. _____

Applicant Telephone No._____

Applicant Fax No._____

Applicant E-Mail_____

Name_____

Address_____

City_____ State_____ Zip_____

Federal I.D. No. _____

Applicant Telephone No._____

Applicant Fax No._____

Applicant E-Mail_____

Proposed Work Description:

_____
_____
_____
_____
_____
_____
_____
_____
_____
_____
_____
_____
_____
_____
_____
_____
_____

Attached: Duration of Work:

Plans_____ Specifications_____ Begin_____ End_____

Road Name or commonly referred to as_____, Town of Erwin, Steuben County, New York

Nearest Intersecting Road_____ Nearest House Number_____

Acceptance of the requested permit subjects the Responsible Party and all Joint Applicants to the conditions, regulations and responsibilities stated on this application, the permit and all attachments.

Responsible Party _____

Signature of Responsible Party Representative _____Date_____

Joint Applicant_____

Signature of Joint Applicant's Representative _____Date_____

Joint Applicant_____

Signature of Joint Applicant's Representative _____Date_____

Approved By_____Date_____

For: the Town of Erwin, 310 Town Center Road, Painted Post, New York 14870

REQUIREMENTS OF THE RESPONSIBLE PARTY/JOINT APPLICANT

(1) PROTECTIVE LIABILITY INSURANCE COVERAGE

The Responsible Party/Joint Applicant must have protective liability insurance coverage in accordance with the Town of Erwin Standard Insurance Requirements. Expiration of, or lack of liability insurance automatically terminates the permit. Insurance coverage may be provided by furnishing the Town of Erwin with a Certificate of Insurance and a policy endorsement.

(2) COMPENSATION INSURANCE AND DISABILITY COVERAGE

The applicant is required to have compensation insurance and disability coverage as noted in the provisions of The New York State Worker's Compensation Law and acts amendatory thereof for the entire period of the permit, or the permit is invalid. The Responsible Party/Joint Applicant certifies all persons concerned with actual work under this permit are duly covered by Workmen's Compensation Insurance and the Town of Erwin shall be held harmless on account thereof.

(3) ASSIGNABILITY

This permit is personal with the Responsible Party/Joint Applicant. It is not assignable nor can the applicant allow another person or corporation to exercise any right under it without the endorsement of approval by the undersigned. Further, The Responsible Party is liable for the actions of its employees, sub-contractors and Joint Applicants with regard to the terms and specifications of the permit.

(4) HOLD HARMLESS CLAUSE

The Responsible Party/Joint Applicant agrees that he is not an agent or employee of the Town of Erwin and will hold the Town of Erwin and the undersigned harmless from any and all damage to person or property occasioned by the performance of their work or in connection with the condition of the highway by reason of such work.

(5) FEDERAL IDENTIFICATION NUMBER

This number is required by Chapter 55 Laws of 1992. Failure to provide this number will result in rejection of the application.

(6) NOTIFICATION

a. Notify the Town of Erwin or their designee one week prior to commencing work. Emergency work performed by public service utilities should be reported the next work day.
b. Notify area gas distributors 72 hours prior to blasting.
c. Notify utility companies with facilities in the work areas before starting work. in accordance with industrial code rule 53. The Responsible Party/Joint Applicant is responsible for contacting the Dig Safely One Call Center and following the procedures established for under ground utilities in accordance with New York State Code Rule 753.
d. Notification to, and Right-of-Way release from all adjacent property owners associated with the proposed project is a requirement of the Responsible Party/Joint Applicant.

(7) SITE CARE AND RESTORATION

No unnecessary obstruction is to be left in the R.O.W or in such a position as to block warning signs during non-working hours. No work shall be done to obstruct drainage or divert creeks, water courses or sluices onto the R.O.W. All false work must be removed and all excavations must be filled in and restored to the satisfaction of the Town of Erwin or their designee.

(8) COSTS INCURRED BY ISSUANCE OF THIS PERMIT

All costs beyond the limits of the protective liability insurance are the responsibility of the Responsible Party/Joint Applicant. The Town of Erwin shall be held free of any costs incurred by this permit, direct or indirect.

(9) SUBMITTING WORK PLANS

The applicant will submit plans and/or maps as required by the Town of Erwin. This shall include all topographic details within the project area, a description of the proposed method of construction, and drawings accurately depicting the proposed project.

Plan work with future adjustments in mind, as any relocation, replacement or removal of the installation authorized by this permit made necessary by future highway maintenance, reconstruction or new construction, will be the responsibility of the Responsible Party/Joint Applicant. Access roads and driveway plans should be prepared in accordance with the NYSDOT Policy and Standards For Entrances to State Highways. The Responsible Party/Joint Applicant must coordinate his work with all the Town of Erwin construction or maintenance projects.

(10) TRAFFIC MAINTENANCE

A plan detailing how the Responsible Party/Joint Applicant intends to maintain and protect traffic shall be submitted with the work plans. The Responsible Party/Joint Applicant is responsible for traffic protection and maintenance in accordance with The Manual on Uniform Traffic Control Devices. Anyone working within the Town of Erwin R.O.W. must wear OSHA approved high visibility apparel and hard hat.

(11) SCOPE

a. Areas Covered

Permits issued are for highways, bridges and culverts over which the Town of Erwin has jurisdiction.

b. Legal

The priviledge granted by the permit does not authorize any infringement of federal, state or local laws or regulations, is limited to the extent of the authority of the Town of Erwin in the premises and is transferable and assignable only with the written consent of The Town of Erwin.

c. The Town of Erwin Reservation

The Town of Erwin reserves the right to modify fees and to annul or revoke the permit at any time at his discretion without a hearing or the necessity of showing cause.

d. Locations

Work locations must be approved by the Town of Erwin or their designee.

e. Maintenance

Property owners having access to a town highway shall be fully responsible for the maintenance of their driveway in accordance with the NYSDOT Policy and Standards For Entrances To State Highways.

f. Work Commencement and Completion

Work shall start and finish within the dates listed on the permit application under Duration of Work or said permit may be revoked.

(12) COMPLETION OF PROJECT AND FUTURE RESPONSIBILITY

Upon completion of the work authorized by the permit, the Responsible Party/Joint Applicant or his successors in interest, shall be responsible for the maintenance and repair of such work or portion of such work as set forth within the Terms, Conditions and Requirements of the permit. Further, the Utility Owner is responsible for their utility throughout the life of said utility. This includes but is not limited to: safety, maintenance and future infrastructure improvements.

SECTION 12

STANDARD INSURANCE REQUIREMENTS

TOWN OF ERWIN
STANDARD INSURANCE REQUIREMENTS

Prior to permit approval a certificate of Insurance and a policy endorsement covering items A, B, C and D must be presented to the Town of Erwin.

Items:

A. **The Town of Erwin, 310 Town Center Road, Painted Post, NY 14870** shall be named as an additional insured for the purpose of coverage but not the payment of premium.

B. **Acknowledgement**: The insurance companies providing coverage acknowledge that the named insured is entering into a contract with the Town of Erwin in which the named insured agrees to defend, hold harmless and indemnify the Town of Erwin, its officials, employees and agents against all claims resulting from work performed, material handled and services rendered. The contractual liability coverage evidenced will cover the liability assumed under the Town of Erwin, Highway / Utility Work Permit.

C. **Prior to non-renewal, cancellation or a change of coverage** on this policy, at least thirty (30) days of advance notice shall be given to the Town of Erwin, 310 Town Center Road, Painted Post, NY 14870.

D. **MINIMUM COVERAGES AND LIMITS:**

1.) COMPREHENSIVE GENERAL LIABILITY TO INCLUDE:
Premises and operations, products and completed operations, independent contractor, contractual and broad form property damage, xcu hazards and personal injury. Minimum coverage limits shall be $1,000,000 per incident and $3,000,000 umbrella or excess policy unless otherwise accepted by the Town Supervisor, Town Manager or Town Attorney

2.) AUTO LIABILITY TO INCLUDE:
Owned, hired, and non owned. Minimum coverage limits $1,000,000.

E. **WORKERS' COMPENSATION, EMPLOYERS LIABILITY AND DISABILITY BENEFITS ARE STATUTORY.** Municipalities cannot approve or accept coverage of these items using an Acord certificate. In order to Provide the proper documentation please review the attached sheet.

Town of Erwin
Workers' Compensation and Disability Benefits Requirements

Permit Applicants,
Sections 57 and 220, Subdivision 8, of the New York State Workers' Compensation and Disability Benefits Law requires that all Municipal and State entities ensure that any business applying for permits, licenses or contracts, provide proof of New York State Workers' Compensation/ Disability Benefits coverage. The Town of Erwin Highway/Utility Work Permit cannot be validated until the proper documentation has been submitted and approved.

Permit applicants must list the following as a certificate holder:
The Town of Erwin
310 Town Center Road
Painted Post, NY 14870

Please note that ***ACORD forms are NOT*** acceptable proof of New York State Workers' Compensation/Disability Benefits coverage!

All Applicants must supply one of the following Workers' Compensation Certificates:

Form C-105.2 State of New York Workers' Compensation Board, Workers' Compensation Certificate. This form can be obtained by having your insurance company contact the NYS Workers' Compensation Board at www.web.state.ny.us or call the Bureau of compliance at (866) 298-7830.

Form U-26.3 The State Insurance Fund. This form can be obtained by contacting NYSIF at (585) 258- 2087.

Form SI-12 The State of New York Workers' Compensation Board Self-Insurer Certification. This form can be obtained by contacting the New York State Self Insurance Office at (518) 402-0247.

Form GSI-105.2 The State of New York Workers' Compensation Board Group Self Insurer. You can obtain this form by contacting the Group Self-Insurance Administrator at (518) 402-0247.

All Applicants must supply one of the following Disability Benefits Certificates:

Form DB-120.1 The State of New York Workers' Compensation Board, Employer's Application for compliance with Disability Benefits Law. This certificate can be obtained by contacting your insurance company.

Form DB-155 The State of New York Workers' Compensation Board Certificate of Disability Benefits Self-Insurance. This certificate can be obtained by contacting The New York State Self-Insurance Office at (518) 402-0247.

Companies that own facilities in the Town of Erwin and are planning on subcontracting the work to be performed are listed as the permit applicant and must follow the aforementioned guidelines. New York State subcontractors will additionally need to supply New York State Workers' Compensation coverage certification. Out-of-state subcontractors will need to produce workers' compensation coverage that specifically lists coverage by their carrier in New York State! Additionally, Out-of-state employers will need to apply to the NYS Workers' Compensation Board if they meet any of the following criteria:

- Permanent NYS Location
- Hire an employee(or subcontractors) in NYS
- Pay over $50,000 per year to employees while they work in NYS
- Employees (or subcontractors) assigned to work over 90 days in NYS during a calendar year. Disability benefits coverage is required if the business employs individuals in NYS for more than 30 days in a calendar year.

GENERAL SITE DETAILS

TOWN OF ERWIN
STEUBEN COUNTY, NEW YORK

MAY 2012

HUNT

607 358 1000
FAX 358 1800

ENGINEERS ARCHITECTS SURVEYORS

AIRPORT CORPORATE PARK, 100 HUNT CENTER, HORSEHEADS, N.Y. 14845

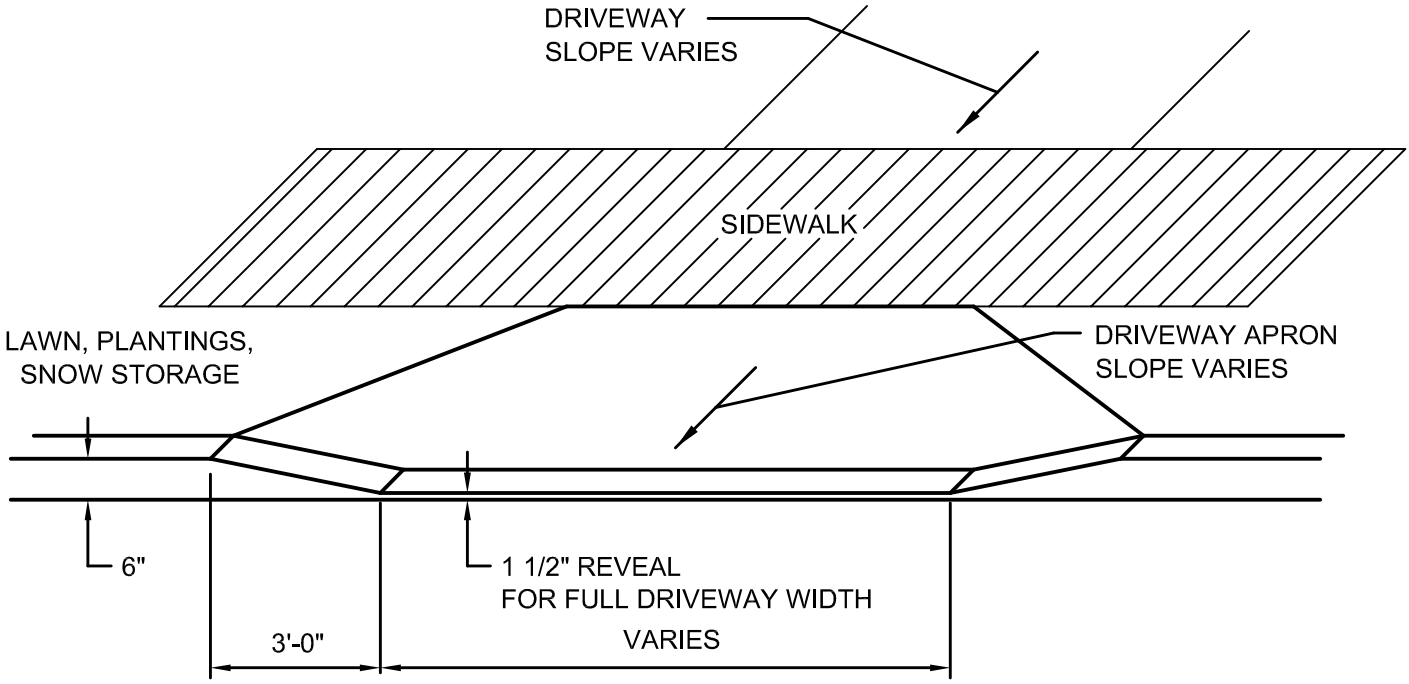

1 TYPICAL DRIVEWAY APRON DETAIL

SCALE: NOT TO SCALE

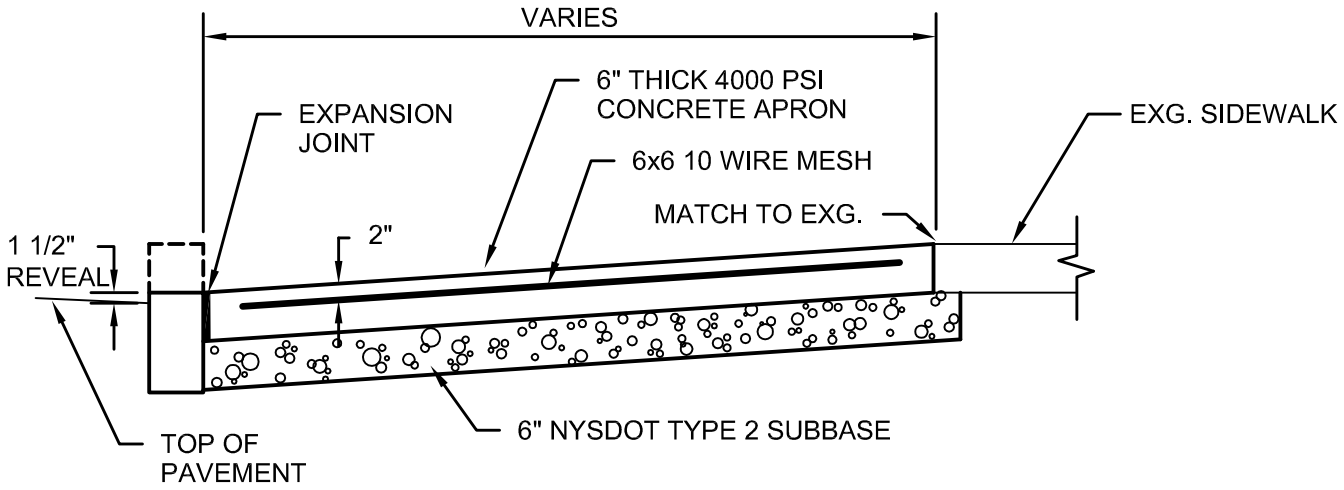

2 DRIVEWAY APRON SECTION

SCALE: NOT TO SCALE

HUNT
607 358 1000
FAX 358 1800
ENGINEERS • ARCHITECTS • SURVEYORS
AIRPORT CORPORATE PARK, 100 HUNT CENTER, HORSEHEADS, N.Y. 14845

DRIVEWAY APRON DETAILS

GENERAL SITE DETAILS
TOWN OF ERWIN
STEUBEN COUNTY, NEW YORK

L1
DETAIL

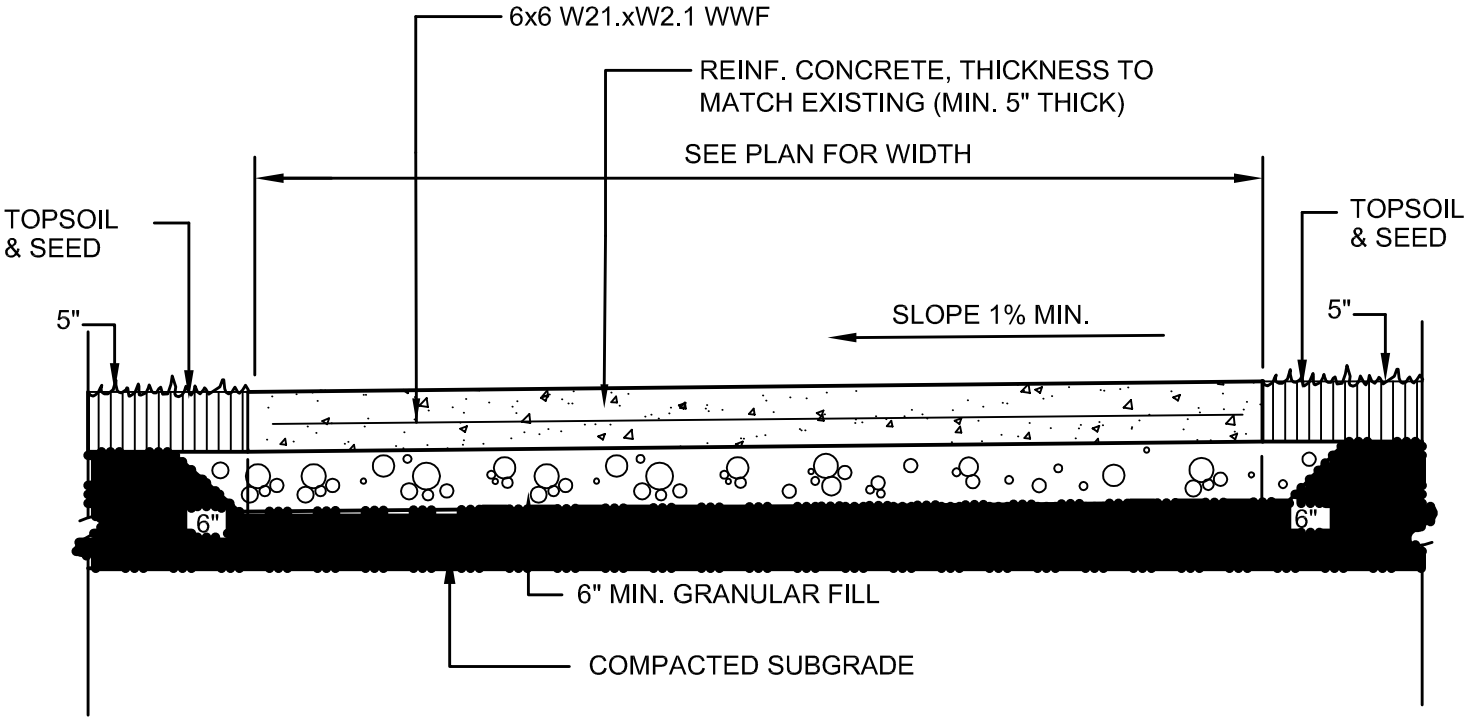

SECTION VIEW

*NOTE:
CONCRETE SIDEWALK TO BE 6" THICK AT DRIVEWAYS & CONCRETE GUTTERS

1 CONCRETE WALK SECTION

SCALE: NOT TO SCALE

HUNT
607 358 1000
FAX 358 1800
ENGINEERS • ARCHITECTS • SURVEYORS
AIRPORT CORPORATE PARK, 100 HUNT CENTER, HORSEHEADS, N.Y. 14845

TYPICAL CONCRETE WALK SECTION

GENERAL SITE DETAILS
TOWN OF ERWIN
STEUBEN COUNTY, NEW YORK

L2
DETAIL

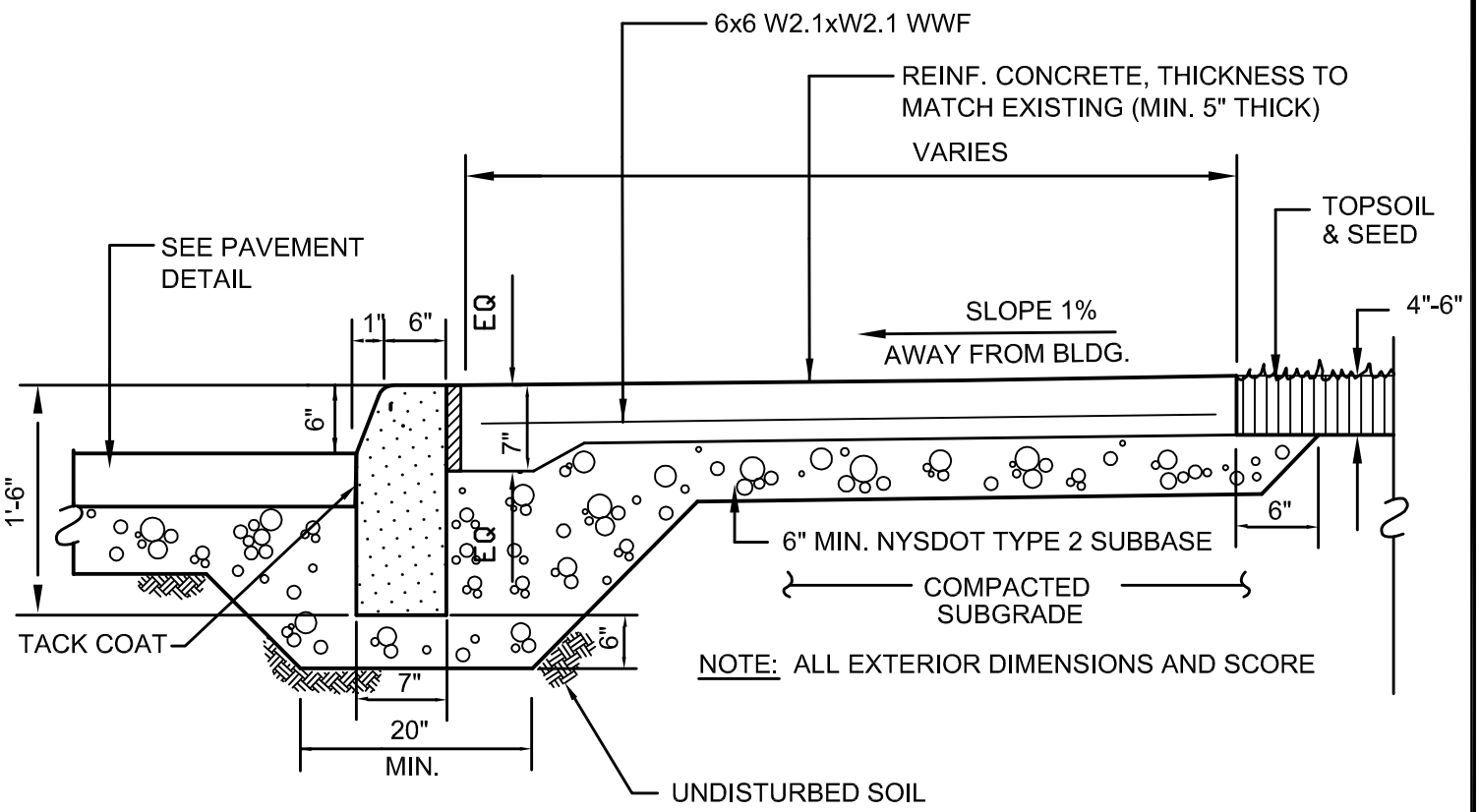

NOTE: ALL EXTERIOR DIMENSIONS AND SCORE

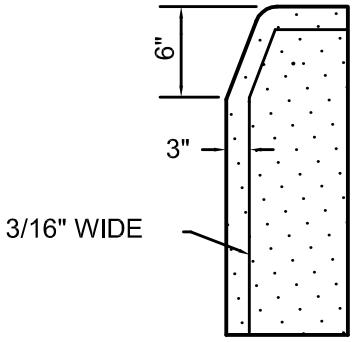

SAWED JOINT DETAIL

* 3/4" PRE-MOLDED EXPANSION JOINT MATERIAL SHALL CONFORM TO CURB CROSS SECTION, SPACED 20' O.C. SAW JOINTS AT 5' O.C.

1 CURB WITH WALK SECTION

SCALE: NOT TO SCALE

HUNT
607 358 1000
FAX 358 1800
ENGINEERS • ARCHITECTS • SURVEYORS
AIRPORT CORPORATE PARK, 100 HUNT CENTER, HORSEHEADS, N.Y. 14845

CURB WITH WALK SECTION

GENERAL SITE DETAILS
TOWN OF ERWIN
STEUBEN COUNTY, NEW YORK

L3
DETAIL

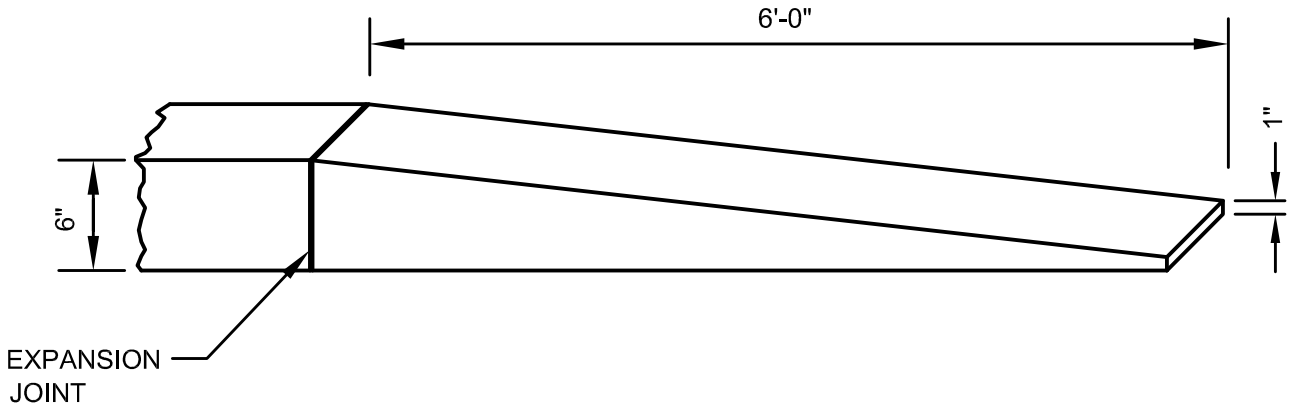

1 CONCRETE CURB TAPER

SCALE: NOT TO SCALE

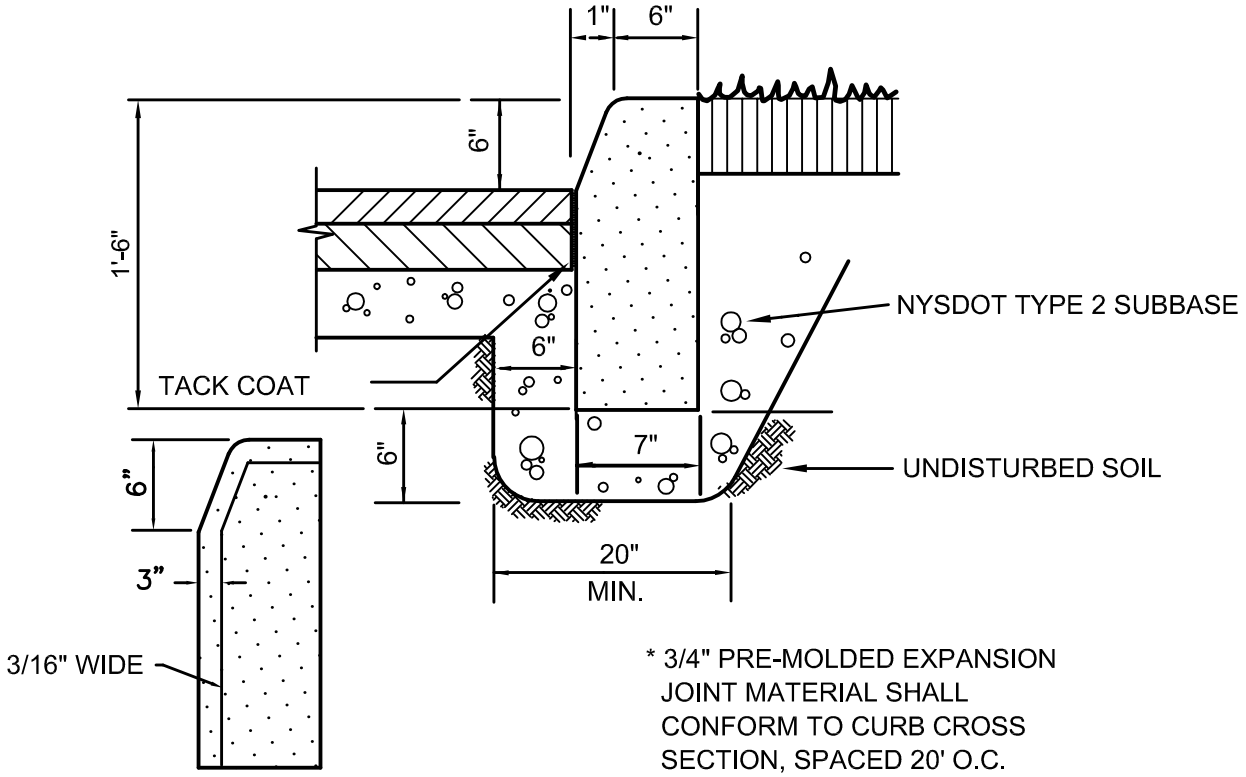

* 3/4" PRE-MOLDED EXPANSION JOINT MATERIAL SHALL CONFORM TO CURB CROSS SECTION, SPACED 20' O.C. SAW JOINTS AT 5' O.C.

SAWED JOINT DETAIL

2 CONCRETE CURB SECTION

SCALE: NOT TO SCALE

HUNT
607 358 1000
FAX 358 1800
ENGINEERS • ARCHITECTS • SURVEYORS
AIRPORT CORPORATE PARK, 100 HUNT CENTER, HORSEHEADS, N.Y. 14845

TYPICAL CONCRETE CURB DETAILS

GENERAL SITE DETAILS
TOWN OF ERWIN
STEUBEN COUNTY, NEW YORK

L4
DETAIL

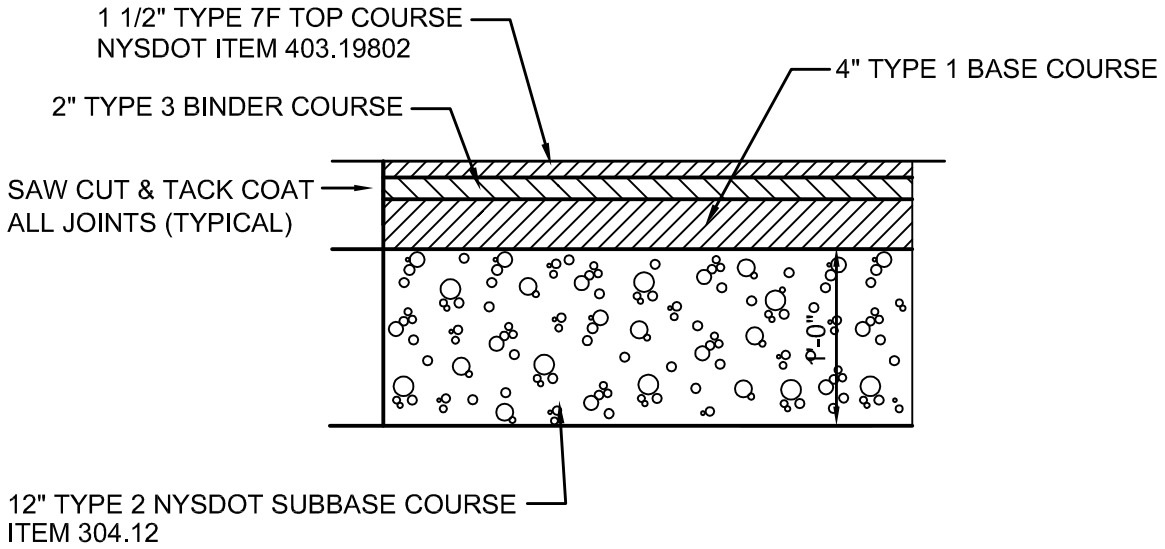

1 TYPICAL MAJOR ROADWAY PAVEMENT SECTION

SCALE: NOT TO SCALE

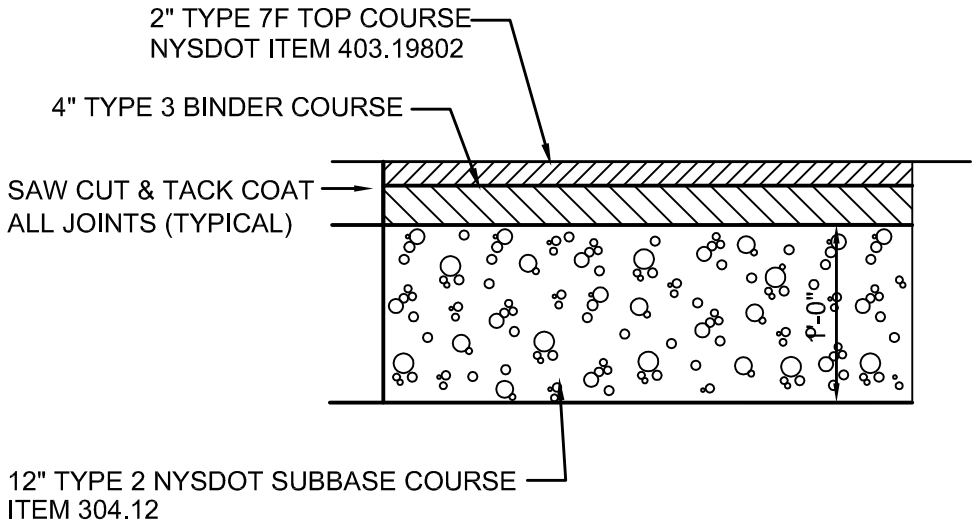

2 TYPICAL MINOR ROADWAY PAVEMENT SECTION

SCALE: NOT TO SCALE

HUNT
607 358 1000
FAX 358 1800
ENGINEERS • ARCHITECTS • SURVEYORS
AIRPORT CORPORATE PARK, 100 HUNT CENTER, HORSEHEADS, N.Y. 14845

TYPICAL PAVEMENT SECTION

GENERAL SITE DETAILS
TOWN OF ERWIN
STEUBEN COUNTY, NEW YORK

L5
DETAIL

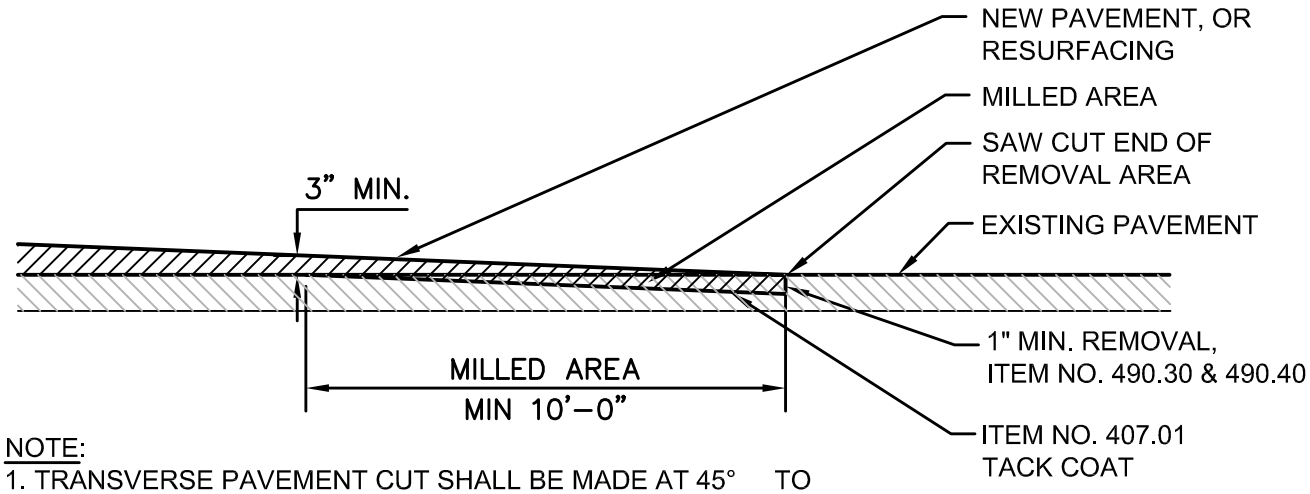

NOTE:

1. TRANSVERSE PAVEMENT CUT SHALL BE MADE AT 45° TO PAVEMENT EDGE WITH 90° ANGLE AT ℄ OR A.O.B.E.

2. ALL EDGES OF EXISTING ASPHALT SHALL BE TACK COAT.

3. ALL SEAMS SHALL BE CRACK SEALED.

1 PAVEMENT TRANSITION DETAIL

SCALE: NOT TO SCALE

HUNT
607 358 1000
FAX 358 1800
ENGINEERS • ARCHITECTS • SURVEYORS
AIRPORT CORPORATE PARK, 100 HUNT CENTER, HORSEHEADS, N.Y. 14845

PAVEMENT TRANSITION DETAIL

GENERAL SITE DETAILS
TOWN OF ERWIN
STEUBEN COUNTY, NEW YORK

L6
DETAIL

	TRAVEL LANE WIDTH	SHOULDER WIDTH
MAJOR ROADWAY	11 FEET	8 FEET
MINOR ROADWAY	11 FEET	4 FEET (SEE NOTE)

NOTE: AN 8 FOOT SHOULDER SHALL BE PROVIDED ON ONE SIDE OF THE ROAD, AS AGREED BY THE TOWN OF ERWIN HIGHWAY SUPERINTENDENT, IF A SIDEWALK IS NOT PRESENT OR PROPOSED. THIS EXCLUDES DEAD END AND CUL-DE-SAC ROADWAYS.

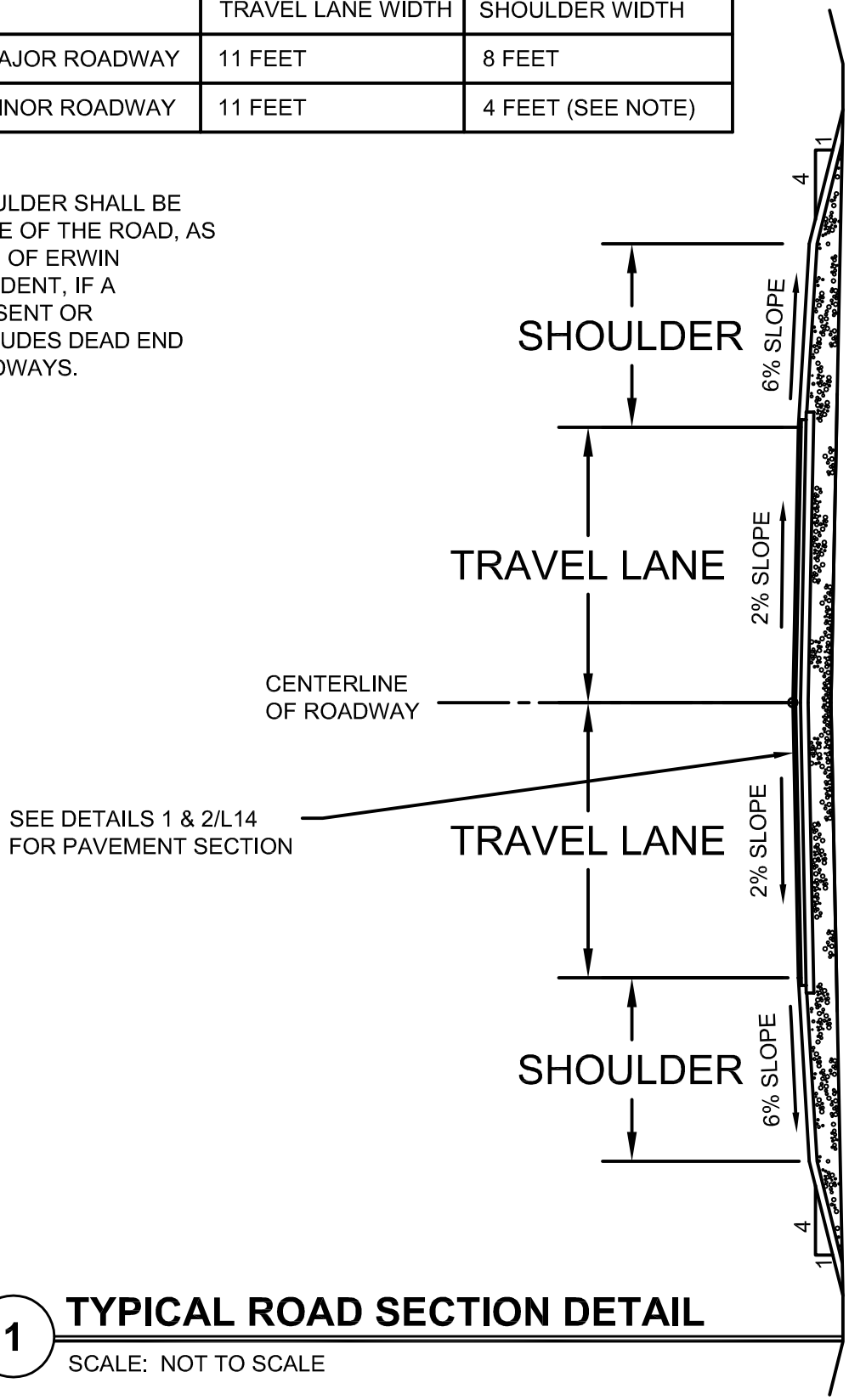

1 TYPICAL ROAD SECTION DETAIL

SCALE: NOT TO SCALE

HUNT
607 358 1000
FAX 358 1800
ENGINEERS • ARCHITECTS • SURVEYORS
AIRPORT CORPORATE PARK, 100 HUNT CENTER, HORSEHEADS, N.Y. 14845

TYPICAL ROAD SECTION DETAIL

GENERAL SITE DETAILS
TOWN OF ERWIN
STEUBEN COUNTY, NEW YORK

L7
DETAIL

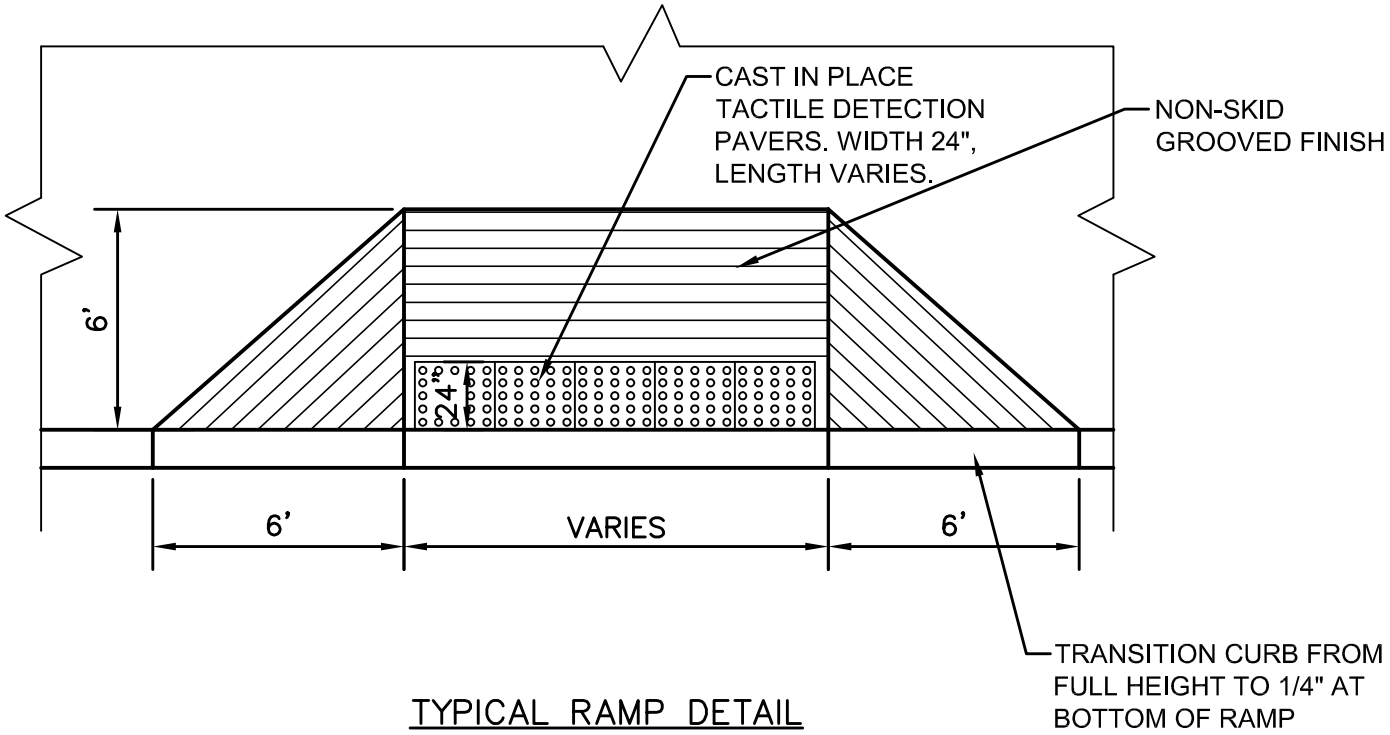

TYPICAL RAMP DETAIL

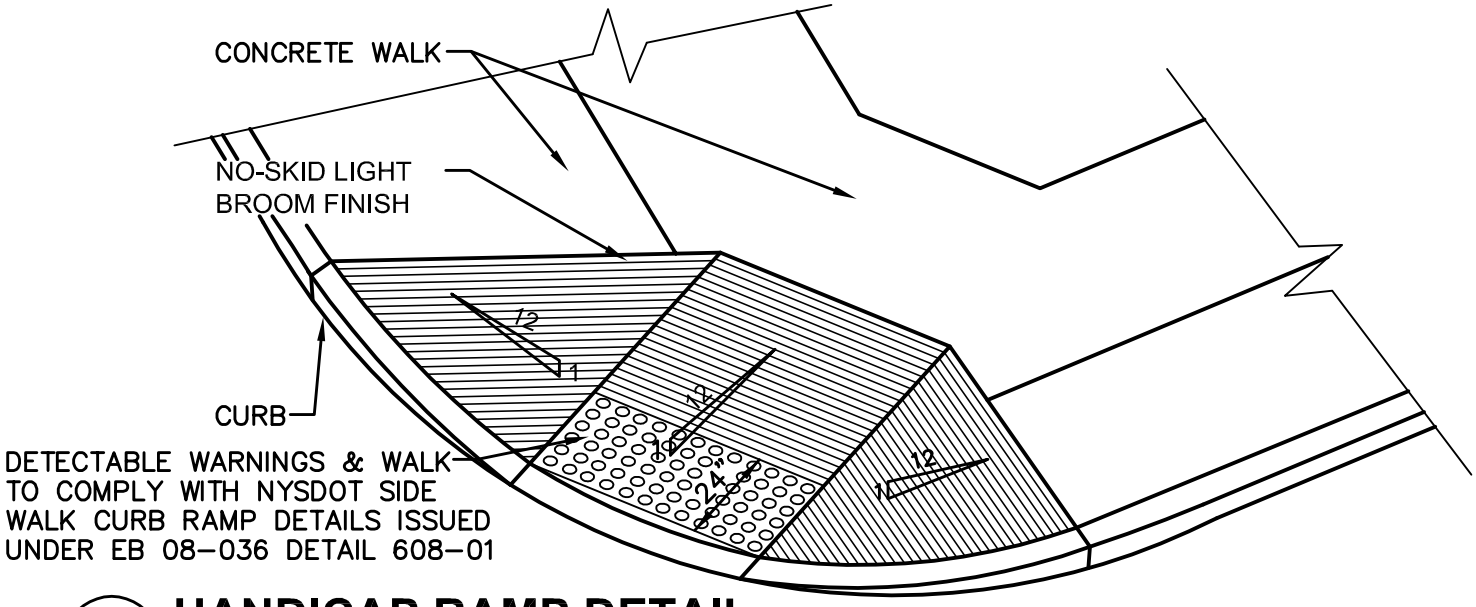

1 HANDICAP RAMP DETAIL

SCALE: N.T.S.

HUNT
607 358 1000
FAX 358 1800
ENGINEERS•ARCHITECTS•SURVEYORS
AIRPORT CORPORATE PARK, 100 HUNT CENTER, HORSEHEADS, N.Y. 14845

HANDICAP RAMP DETAILS

GENERAL SITE DETAILS
TOWN OF ERWIN
STEUBEN COUNTY, NEW YORK

L8
DETAIL

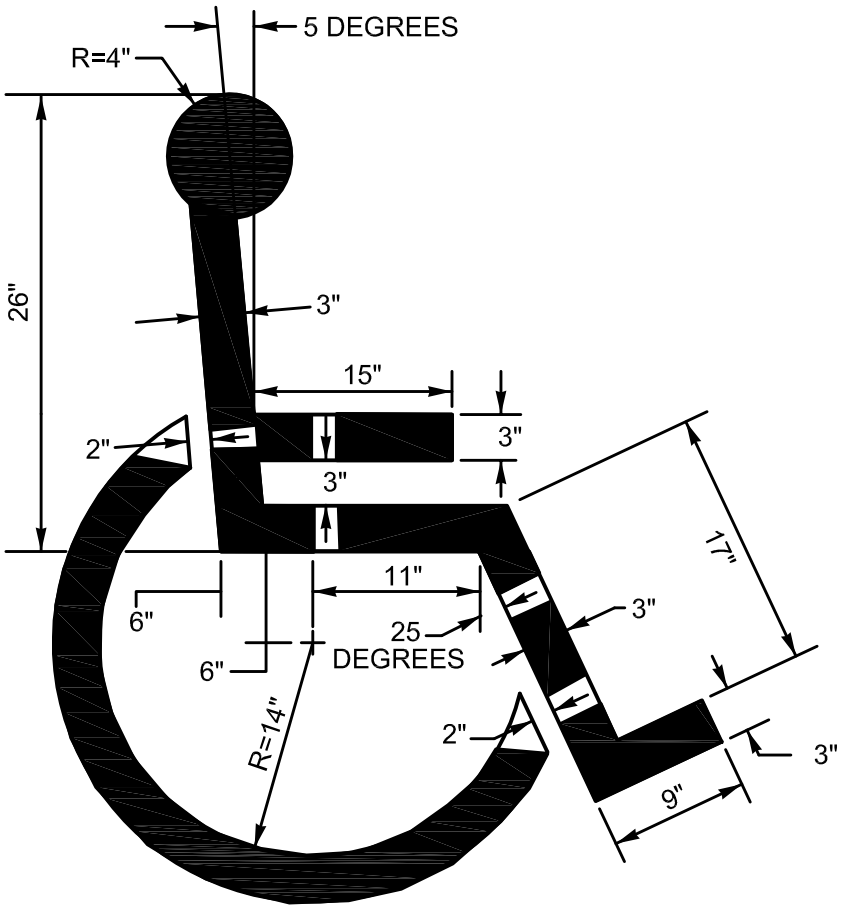

HANDICAPPED SYMBOL

GENERAL NOTE:

1. APPLY TWO COATS OF PAINT TO HANDICAP SYMBOL. SEE SPECIFICATIONS FOR REQUIREMENTS.

1 PAINTED HANDICAP SYMBOL

SCALE: NOT TO SCALE

HUNT
607 358 1000
FAX 358 1800
ENGINEERS • ARCHITECTS • SURVEYORS
AIRPORT CORPORATE PARK, 100 HUNT CENTER, HORSEHEADS, N.Y. 14845

PAINTED HANDICAP SYMBOL

GENERAL SITE DETAILS
TOWN OF ERWIN
STEUBEN COUNTY, NEW YORK

L9
DETAIL

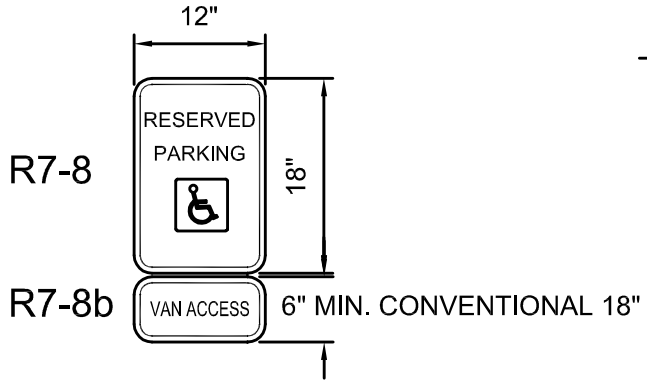

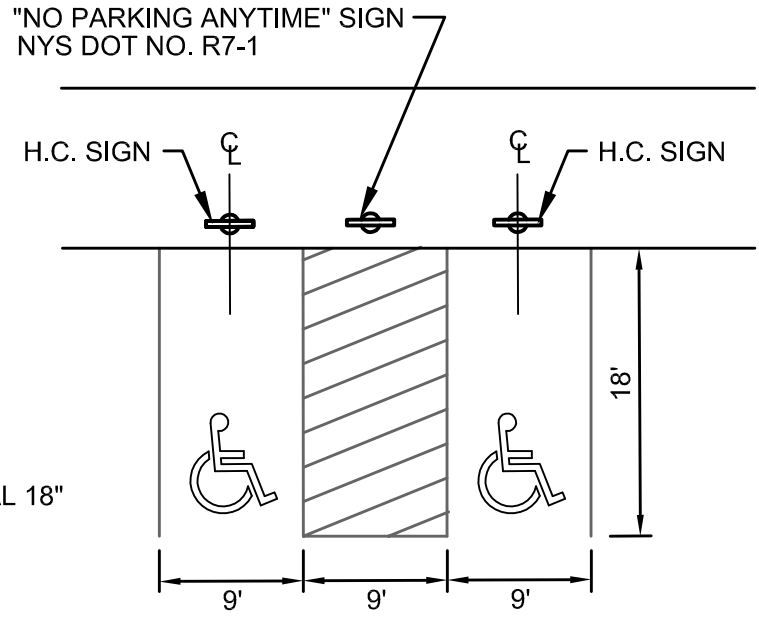

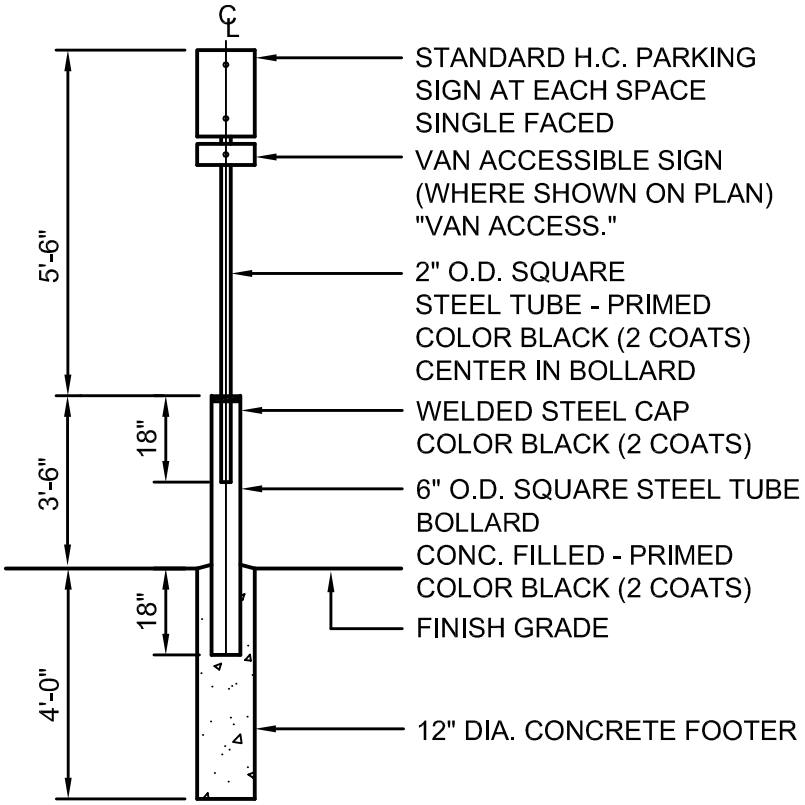

1 HANDICAP PARKING DETAILS

SCALE: NOT TO SCALE

HUNT
607 358 1000
FAX 358 1800
ENGINEERS • ARCHITECTS • SURVEYORS
AIRPORT CORPORATE PARK, 100 HUNT CENTER, HORSEHEADS, N.Y. 14845

HANDICAP PARKING DETAILS

GENERAL SITE DETAILS
TOWN OF ERWIN
STEUBEN COUNTY, NEW YORK

L10
DETAIL

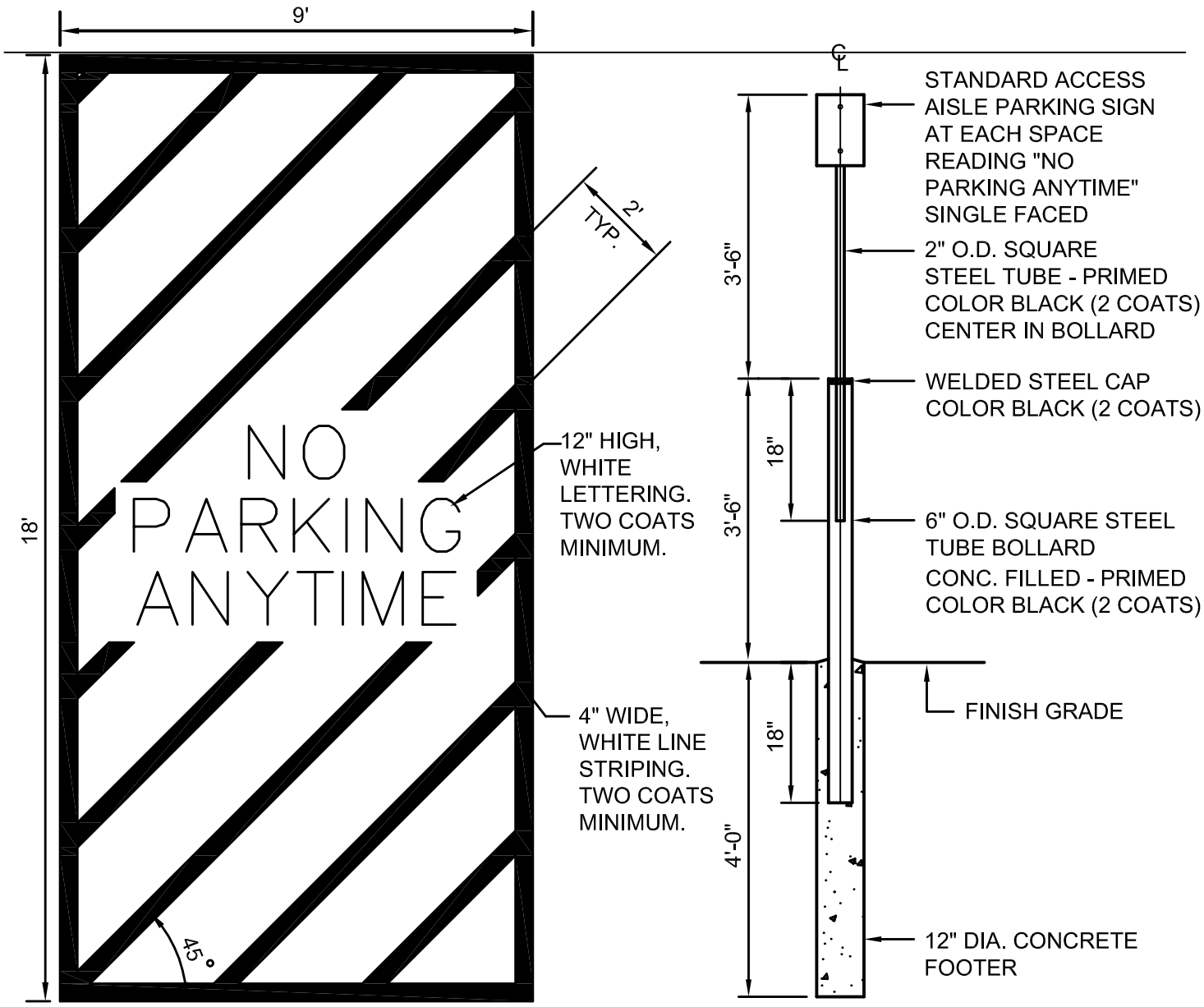

1 ACCESS ISLE STRIPING & SIGNAGE

SCALE: NOT TO SCALE

HUNT
607 358 1000
FAX 358 1800
ENGINEERS • ARCHITECTS • SURVEYORS
AIRPORT CORPORATE PARK, 100 HUNT CENTER, HORSEHEADS, N.Y. 14845

ACCESS ISLE STRIPING & SIGNAGE DETAIL

GENERAL SITE DETAILS
TOWN OF ERWIN
STEUBEN COUNTY, NEW YORK

L11
DETAIL

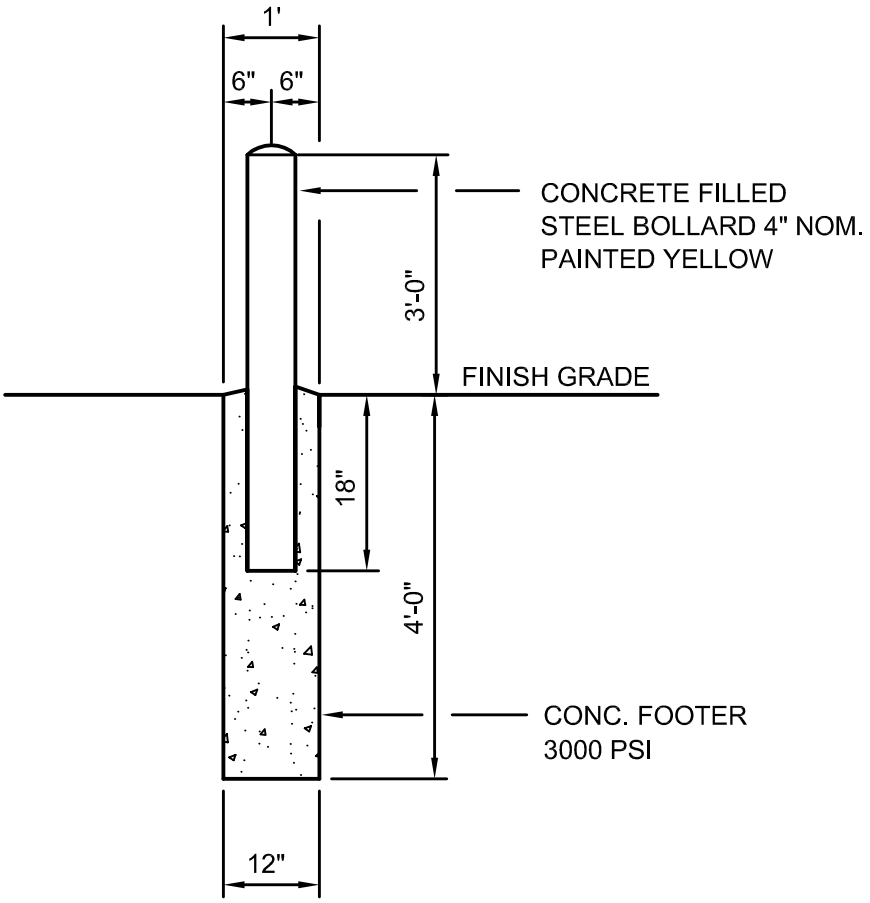

1 BOLLARD DETAIL

SCALE: NOT TO SCALE

HUNT
607 358 1000
FAX 358 1800
ENGINEERS • ARCHITECTS • SURVEYORS
AIRPORT CORPORATE PARK, 100 HUNT CENTER, HORSEHEADS, N.Y. 14845

TYPICAL BOLLARD DETAIL

GENERAL SITE DETAILS
TOWN OF ERWIN
STEUBEN COUNTY, NEW YORK

L12
DETAIL

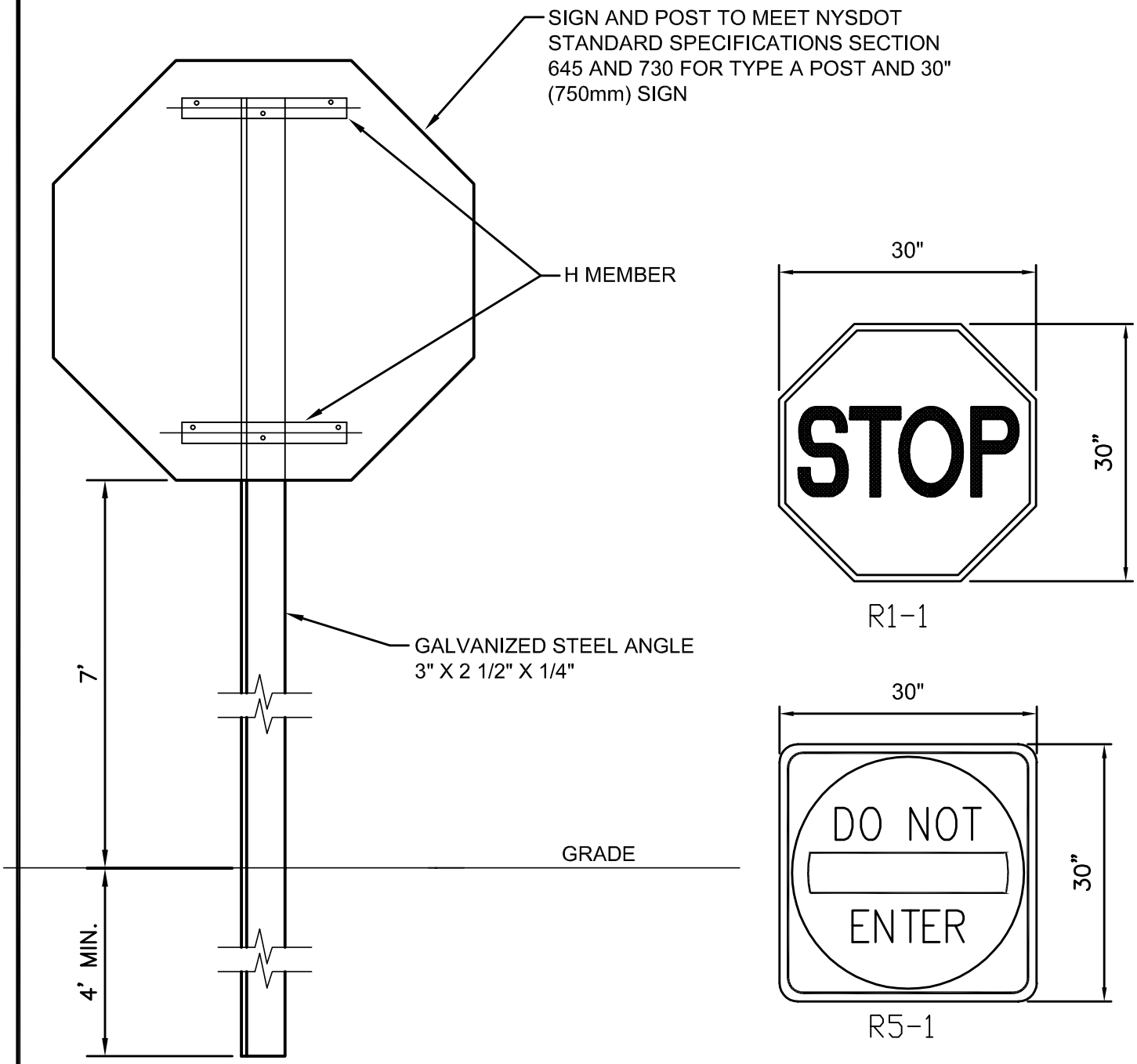

1 TRAFFIC SIGN DETAIL

SCALE: NOT TO SCALE

HUNT
607 358 1000
FAX 358 1800
ENGINEERS•ARCHITECTS•SURVEYORS
AIRPORT CORPORATE PARK, 100 HUNT CENTER, HORSEHEADS, N.Y. 14845

TYPICAL TRAFFIC SIGN DETAILS

GENERAL SITE DETAILS
TOWN OF ERWIN
STEUBEN COUNTY, NEW YORK

L13
DETAIL

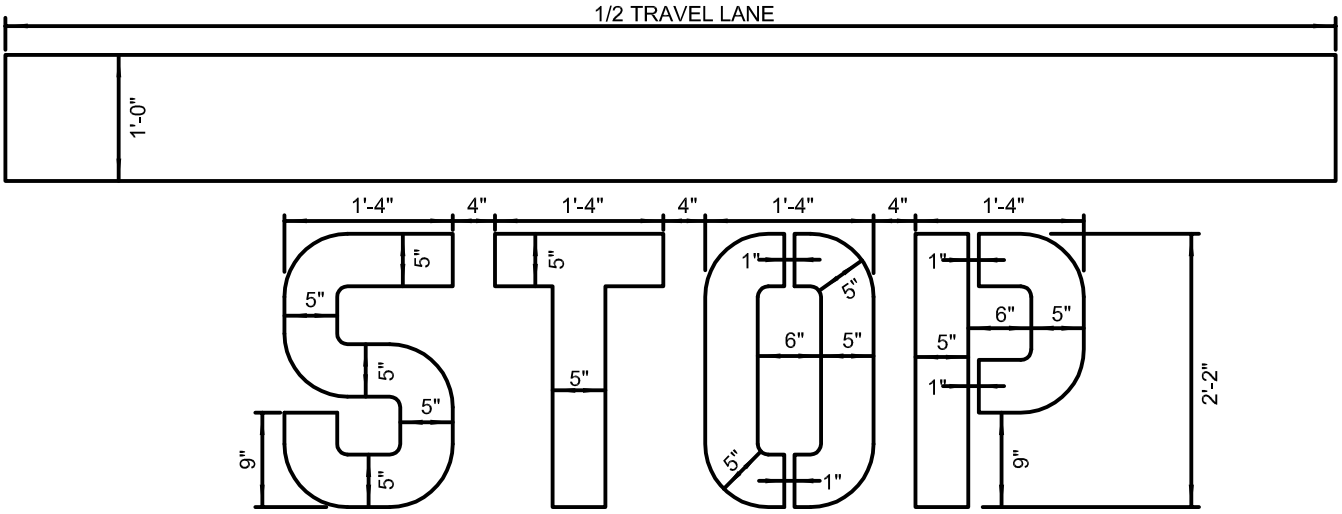

* 1 COAT WHITE PAINT TYP.

1 STOP BAR DETAIL

SCALE: NOT TO SCALE

HUNT
607 358 1000
FAX 358 1800
ENGINEERS • ARCHITECTS • SURVEYORS
AIRPORT CORPORATE PARK, 100 HUNT CENTER, HORSEHEADS, N.Y. 14845

PAINTED STOP BAR DETAIL

GENERAL SITE DETAILS
TOWN OF ERWIN
STEUBEN COUNTY, NEW YORK

L14
DETAIL

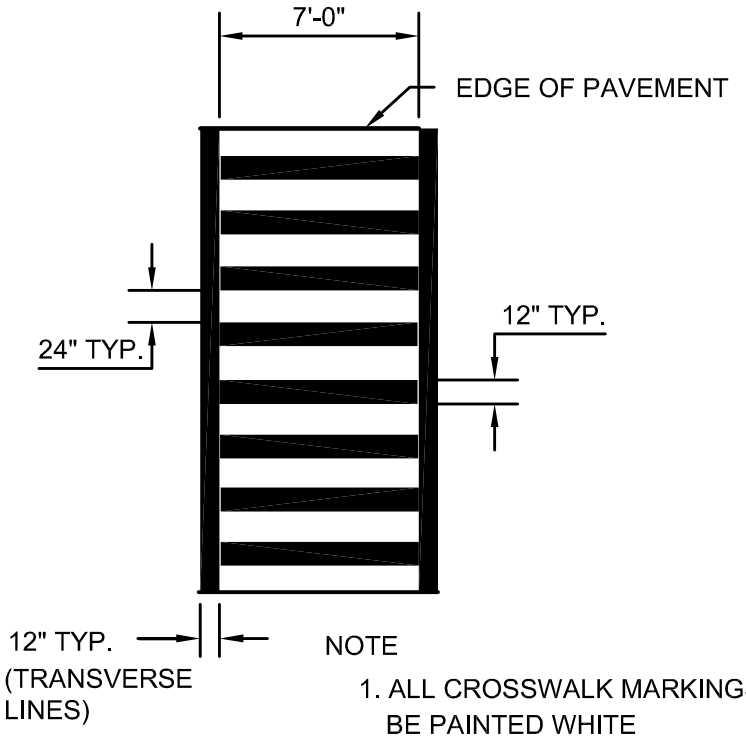

NOTE

1. ALL CROSSWALK MARKINGS SHALL BE PAINTED WHITE

1 TYPICAL CROSSWALK DETAIL

SCALE: NOT TO SCALE

HUNT
607 358 1000
FAX 358 1800
ENGINEERS • ARCHITECTS • SURVEYORS
AIRPORT CORPORATE PARK, 100 HUNT CENTER, HORSEHEADS, N.Y. 14845

TYPICAL PAINTED CROSSWALK DETAIL

GENERAL SITE DETAILS
TOWN OF ERWIN
STEUBEN COUNTY, NEW YORK

L15
DETAIL

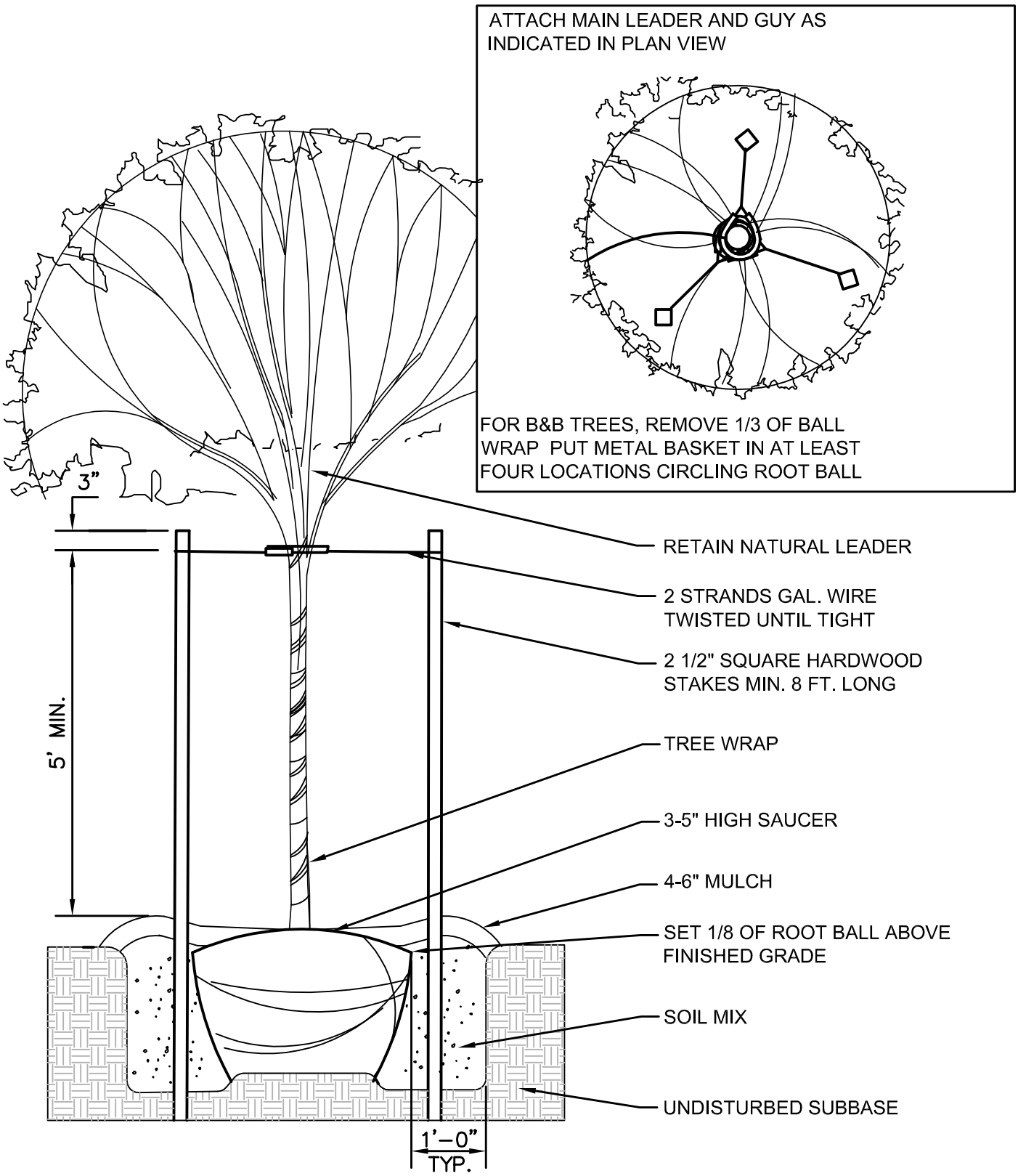

1 DECIDUOUS TREE PLANTING DETAIL

SCALE: N.T.S.

HUNT
607 358 1000
FAX 358 1800
ENGINEERS • ARCHITECTS • SURVEYORS
AIRPORT CORPORATE PARK, 100 HUNT CENTER, HORSEHEADS, N.Y. 14845

DECIDUOUS TREE PLANTING DETAIL

GENERAL SITE DETAILS
TOWN OF ERWIN
STEUBEN COUNTY, NEW YORK

L16
DETAIL

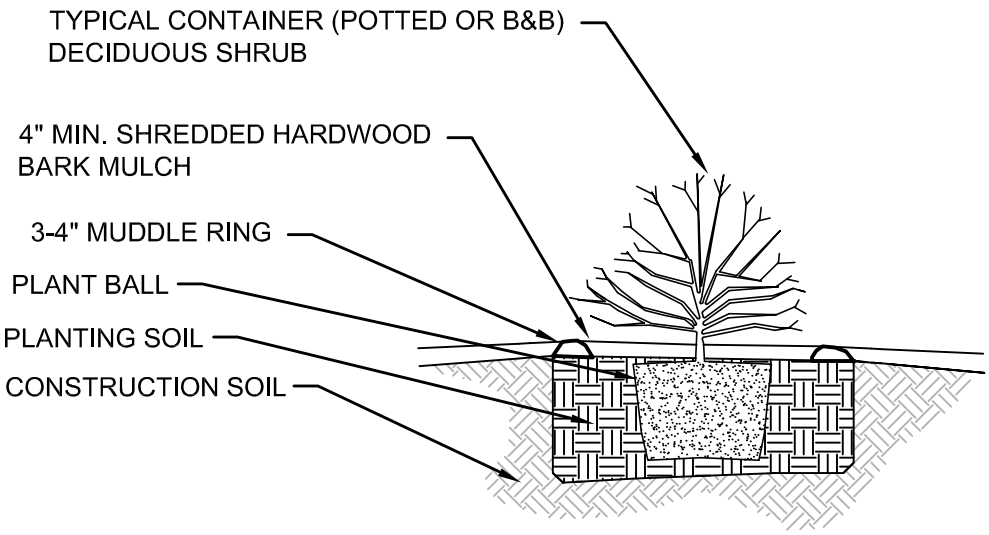

NOTE: PRUNE SHRUB AS RECOMMENDED BY GROWER ONLY AFTER THE PLANT HAS BEEN WATERED IN TO THE PLANTING SOIL

1 DECIDUOUS SHRUB PLANTING DETAIL

SCALE: N.T.S.

HUNT
607 358 1000
FAX 358 1800
ENGINEERS • ARCHITECTS • SURVEYORS
AIRPORT CORPORATE PARK, 100 HUNT CENTER, HORSEHEADS, N.Y. 14845

DECIDUOUS SHRUB PLANTING DETAIL

GENERAL SITE DETAILS
TOWN OF ERWIN
STEUBEN COUNTY, NEW YORK

L17
DETAIL

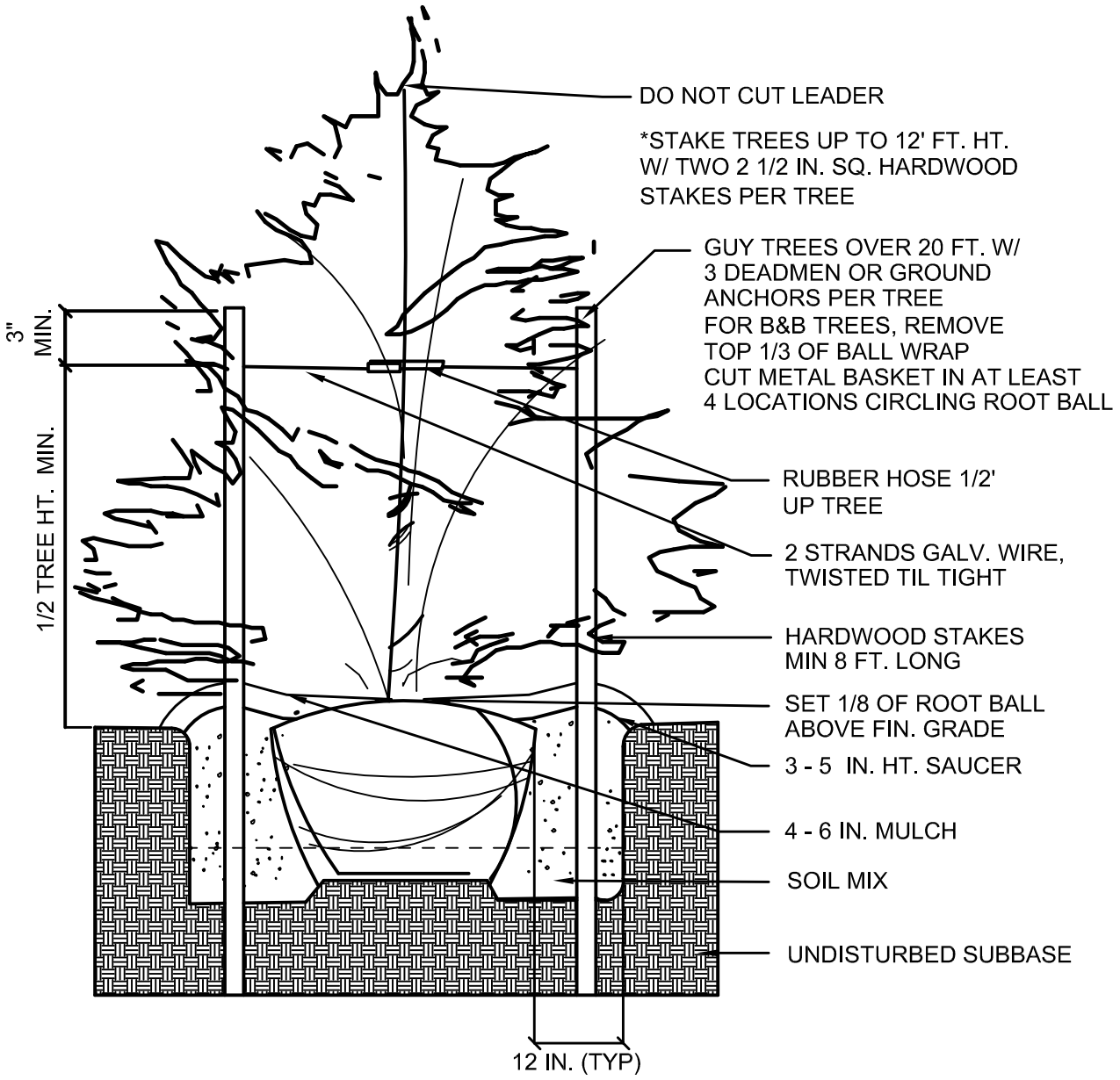

1 EVERGREEN TREE PLANTING DETAIL

SCALE: NOT TO SCALE

HUNT
607 358 1000
FAX 358 1800
ENGINEERS•ARCHITECTS•SURVEYORS
AIRPORT CORPORATE PARK, 100 HUNT CENTER, HORSEHEADS, N.Y. 14845

PLANTING DETAIL

GENERAL SITE DETAILS
TOWN OF ERWIN
STEUBEN COUNTY, NEW YORK

L18
DETAIL

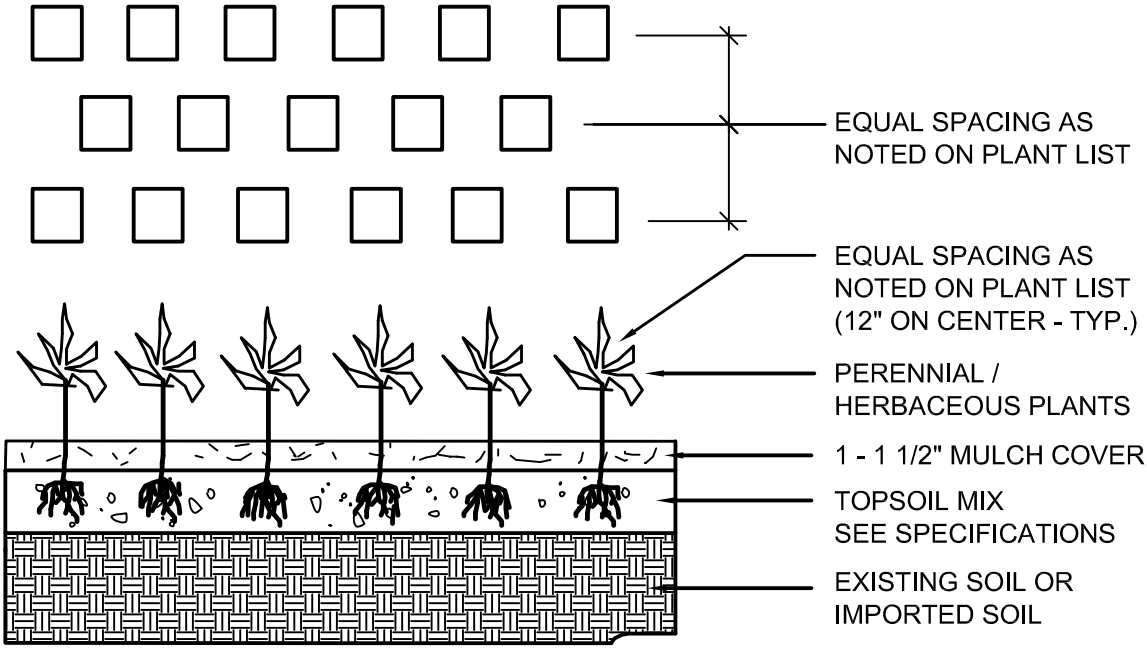

1 GROUNDCOVER / PERENNIAL PLANTING DETAIL

SCALE: NOT TO SCALE

HUNT
607 358 1000
FAX 358 1800
ENGINEERS•ARCHITECTS•SURVEYORS
AIRPORT CORPORATE PARK, 100 HUNT CENTER, HORSEHEADS, N.Y. 14845

PLANTING DETAIL

GENERAL SITE DETAILS
TOWN OF ERWIN
STEUBEN COUNTY, NEW YORK

L19
DETAIL

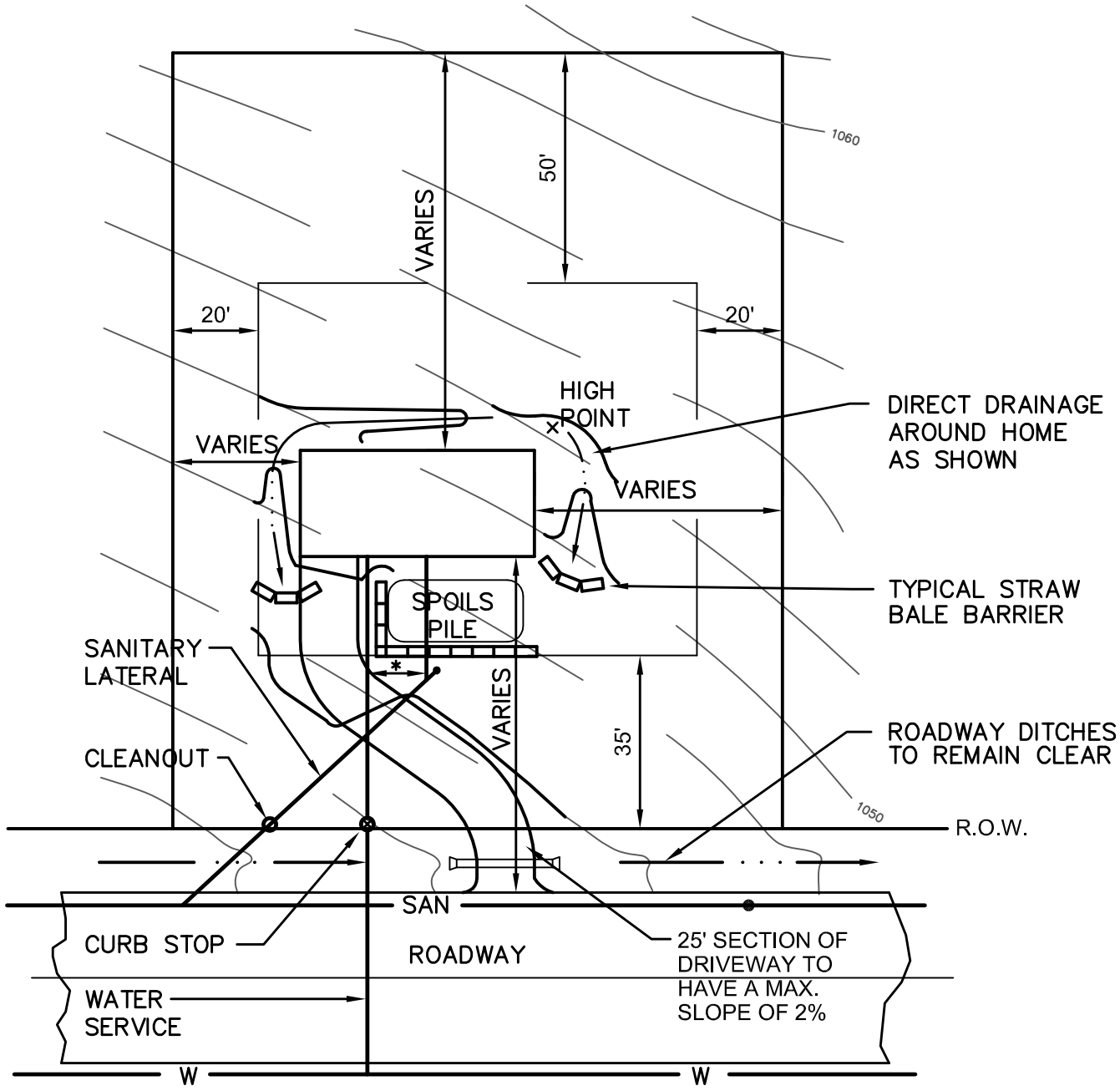

UPHILL LOT

NOTES:
1. REFER TO L21 FOR DOWN HILL LOT
2. REFER TO L22 FOR NOTES

1 INDIVIDUAL ON LOT REQUIREMENTS

SCALE: NOT TO SCALE

HUNT
607 358 1000
FAX 358 1800
ENGINEERS•ARCHITECTS•SURVEYORS
AIRPORT CORPORATE PARK, 100 HUNT CENTER, HORSEHEADS, N.Y. 14845

INDIVIDUAL ON LOT GRADING, EROSION CONTROL, AND UTILITY REQUIREMENTS

GENERAL SITE DETAILS
TOWN OF ERWIN
STEUBEN COUNTY, NEW YORK

L20
DETAIL

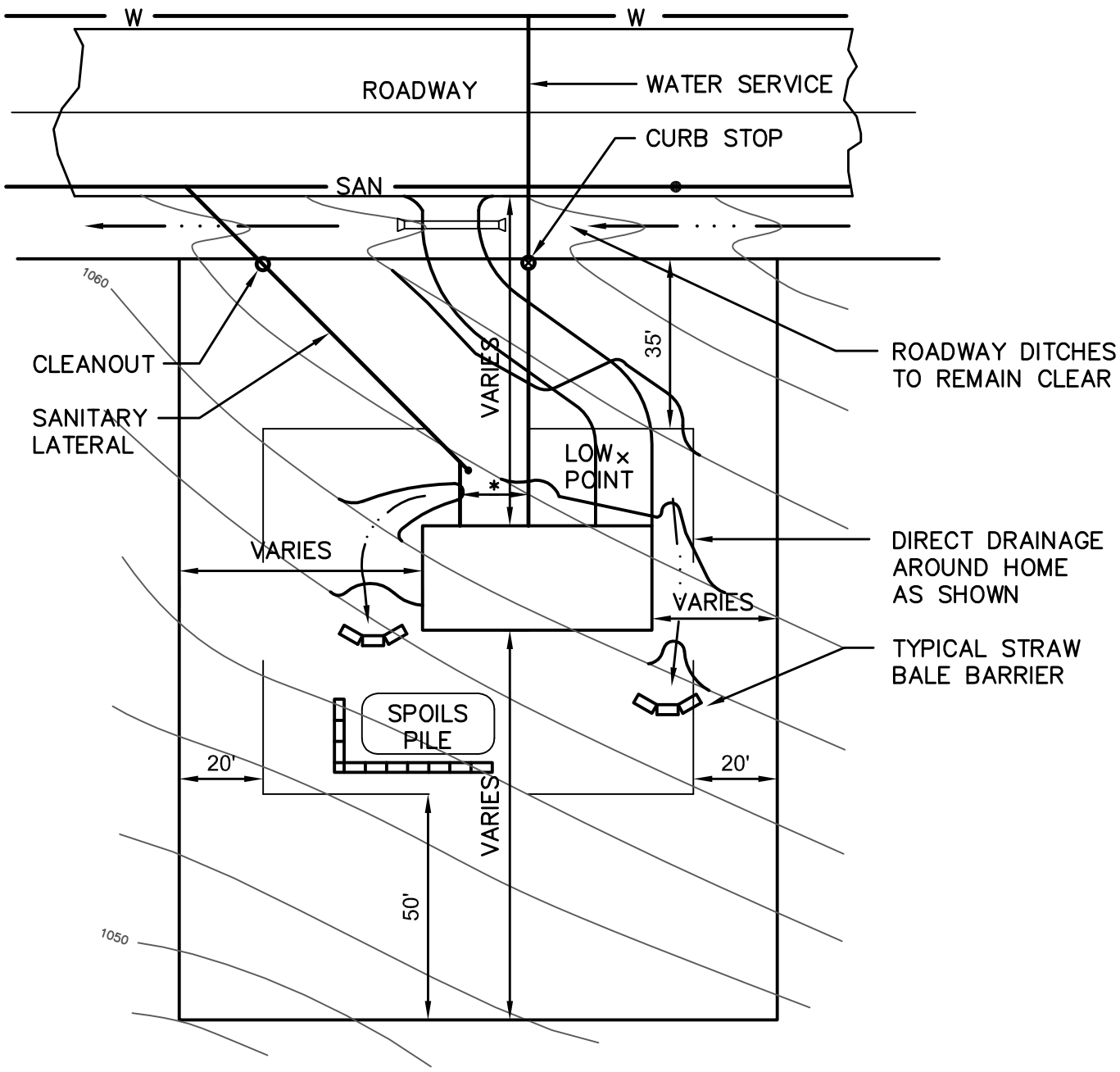

DOWNHILL LOT

NOTES:
1. REFER TO L20 FOR UPHILL LOT
2. REFER TO L22 FOR NOTES

1 INDIVIDUAL ON LOT REQUIREMENTS

SCALE: NOT TO SCALE

HUNT
607 358 1000
FAX 358 1800
ENGINEERS•ARCHITECTS•SURVEYORS
AIRPORT CORPORATE PARK, 100 HUNT CENTER, HORSEHEADS, N.Y. 14845

INDIVIDUAL ON LOT GRADING, EROSION CONTROL, AND UTILITY REQUIREMENTS

GENERAL SITE DETAILS
TOWN OF ERWIN
STEUBEN COUNTY, NEW YORK

L21
DETAIL

LOT GRADING, DRAINAGE AND EROSION CONTROL NOTES:

1. ROOF DRAINS SHOULD DISCHARGE TO SPLASH BLOCKS OR OTHER EROSION CONTROL DEVICES.

2. FOOTER DRAINS SHOULD BE DAYLIGHTED ON LOT TO SPLASH BLOCKS. POINT OF DISCHARGES TO NEIGHBORING LOTS SHALL BE AVOIDED.

3. BASEMENT DRAINS AND SUMP PUMP DISCHARGES SHOULD BE DISCHARGED ON LOT TO SPLASH BLOCKS.

4. STORM DRAINAGE SHOULD BE DIRECTED AWAY FROM SPOILS PILES.

5. SPOILS PILES WHICH ARE TO BE INACTIVE FOR MORE THAN 90 DAYS SHOULD BE TEMPORARILY SEEDED.

6. DOWNSPOUTS AND SWALING SHALL END A MINIMUM OF 10' FROM THE SETBACK LIMITS.

7. CULVERTS (12" DIA. MIN.) SHALL BE PROVIDED AT EACH DRIVEWAY WITH 6" MINIMUM COVER. DRIVEWAY CULVERTS CAN BE AVOIDED IF THE DRIVEWAY IS DOWNSTREAM AND IMMEDIATELY ADJACENT TO A STORMWATER INLET.

8. LONGITUDINAL SLOPES OF DRIVEWAYS SHALL NOT EXCEED 10 PERCENT.

SANITARY SEWER NOTES:

1. LOT OWNER IS RESPONSIBLE TO DETERMINE LOWEST SEWERABLE ELEVATION FOR HOME LOCATION PRIOR TO CONSTRUCTION. ALSO, THE OWNERS LOT PLANS TO THE TOWN OF ERWIN SHALL CONTAIN LATERAL SIZE, LATERAL SLOPE, LATERAL INVERT ELEVATION, AND FLOOR ELEVATION INFORMATION.

2. SANITARY LATERALS AND THEIR CONNECTIONS TO THE PUBLIC SEWER SYSTEM SHALL BE IN ACCORDANCE WITH CHAPTER 101 OF THE TOWN OF ERWIN CODE.

WATER SERVICE NOTES:

1. WATER SERVICES SHALL BE 3/4 INCH DIA. (MIN.)
   TYPE K–COPPER TUBING AND BEDDED IN CUSHION SAND.

NOTE:
THESE REQUIREMENTS SHALL BE INCORPORATED INTO THE SITE PLANS FOR INDIVIDUAL LOTS.

* 10 FT. MINIMUM HORIZONTAL SEPARATION MUST BE PROVIDED BETWEEN WATER SERVICES AND SANITARY LATERALS.

MIN. YARD DIMENSIONS (R12.5)

FRONT	35 FT.
SIDE	20 FT.
REAR	50 FT.

HUNT
607 358 1000
FAX 358 1800
ENGINEERS•ARCHITECTS•SURVEYORS
AIRPORT CORPORATE PARK, 100 HUNT CENTER, HORSEHEADS, N.Y. 14845

INDIVIDUAL ON LOT GRADING, EROSION CONTROL, AND UTILITY REQUIREMENT NOTES

GENERAL SITE DETAILS
TOWN OF ERWIN
STEUBEN COUNTY, NEW YORK

L22
DETAIL

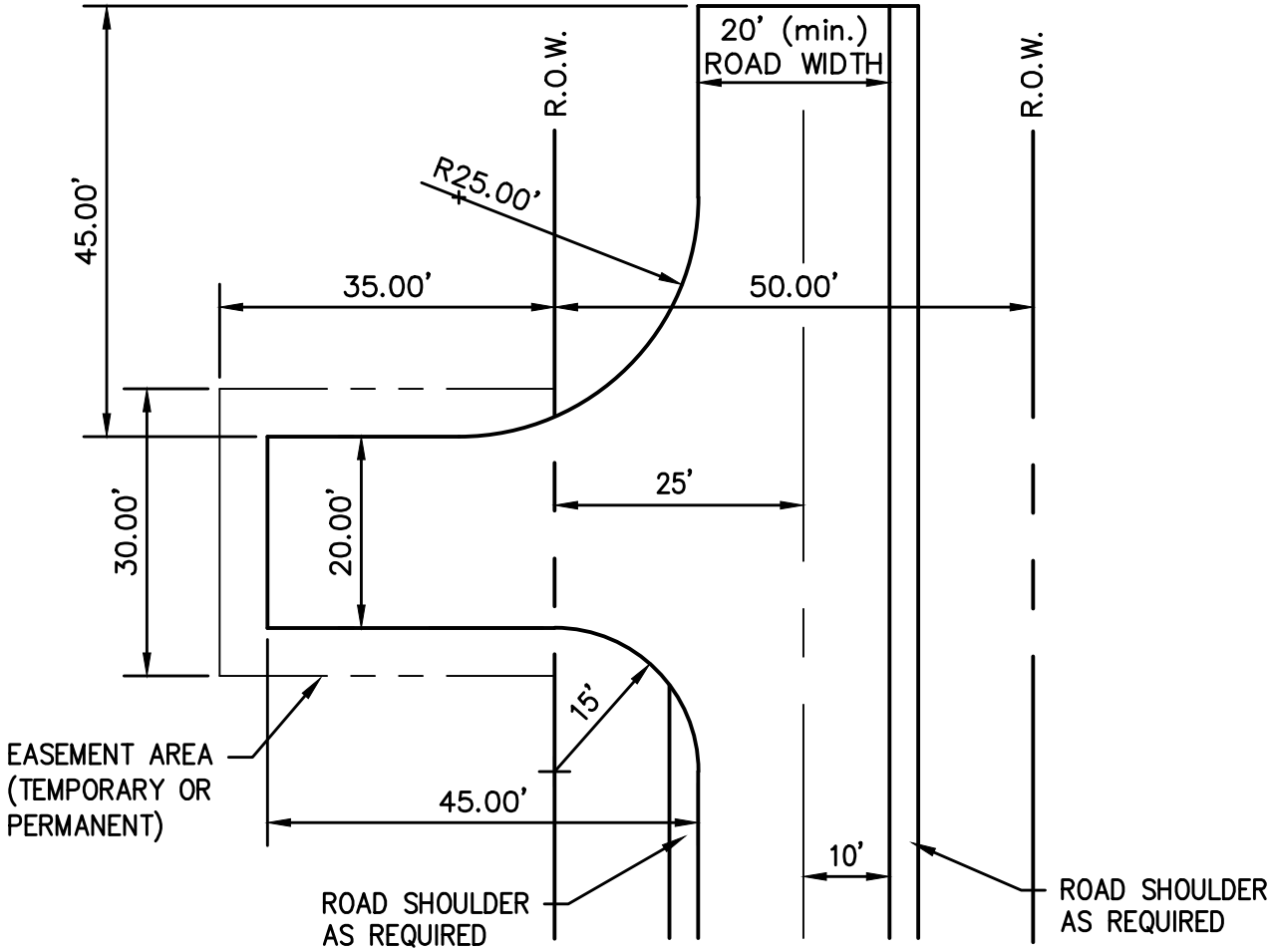

NOTE:
THE TOWN OF ERWIN HIGHWAY SUPERINTENDENT SHALL APPROVE THE LOCATION AND PLACEMENT PRIOR TO INSTALLATION, OF ANY ABOVE GRADE IMPROVEMENT INCLUDING BUT NOT LIMITED TO, LIGHTS, HYDRANTS, MAIL BOXES, DEILNEATORS, LANDSCAPING, ETC.

HUNT
607•358•1000
FAX•358•1800
ENGINEERS •ARCHITECTS• SURVEYORS
AIRPORT CORPORATE PARK, 100 HUNT CENTER, HORSEHEADS, N.Y. 14845

TURN AROUND DETAIL

GENERAL SITE DETAILS
TOWN OF ERWIN
STEUBEN COUNTY, NEW YORK

L23
DETAIL

SANITARY SEWER DETAILS

TOWN OF ERWIN
STEUBEN COUNTY, NEW YORK

MAY 2012

HUNT

607 358 1000
FAX 358 1800

ENGINEERS ARCHITECTS SURVEYORS

AIRPORT CORPORATE PARK, 100 HUNT CENTER, HORSEHEADS, N.Y. 14845

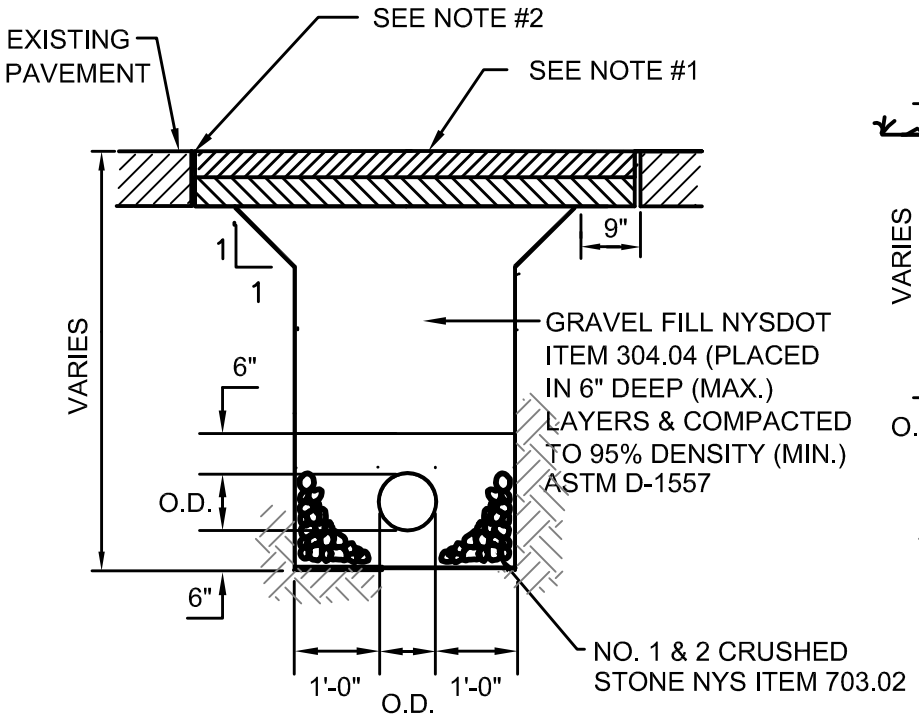

EXG. PAVED ROADWAYS

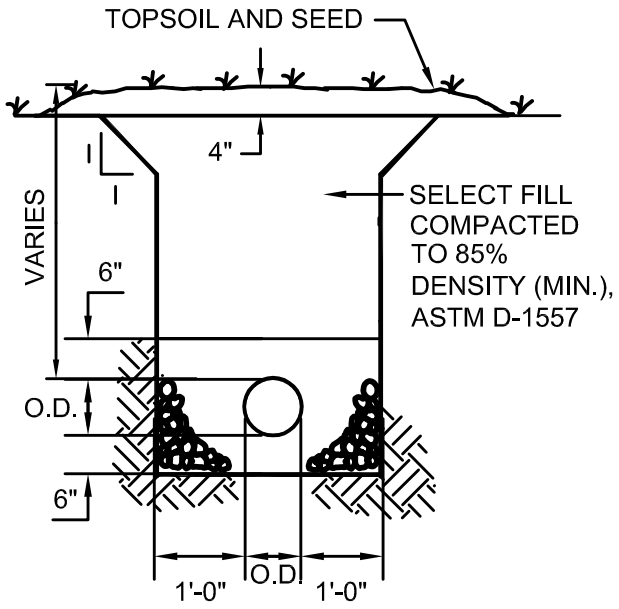

LAWNS/FIELDS

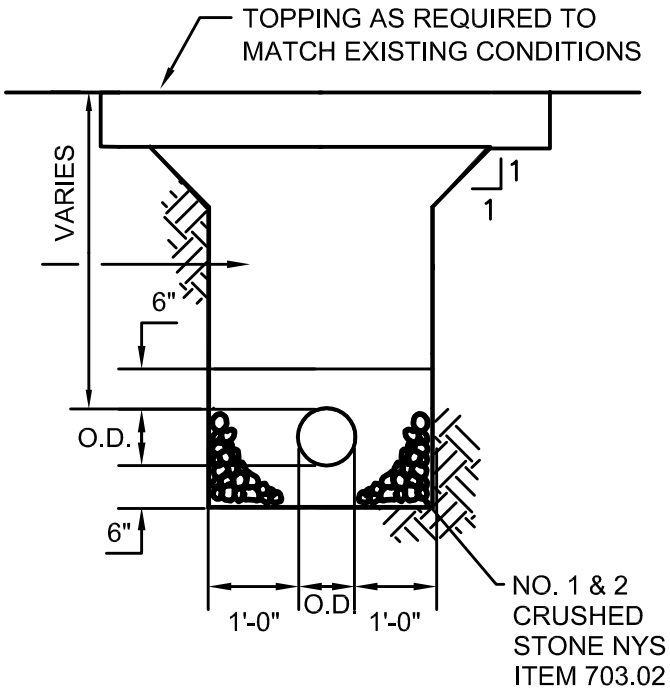

FUTURE & NON-PAVED ROADWAYS

NOTES:

1. PAVEMENT CONSTRUCTION AND SEWER INSTALLATION SHALL CONFORM TO THE TOWN OF ERWIN'S STANDARD SPECIFICATIONS FOR HIGHWAY CONSTRUCTION, WATER DISTRIBUTION, AND WASTEWATER COLLECTION SYSTEMS CONSTRUCTION.
2. JOINTS SHALL BE SAW CUT THROUGH EXISTING SURFACE COURSE AND EDGES SEALED WITH TACK COAT AND ALL SEAMS SHALL BE CRACK SEALED.
3. ALL EXCAVATION SHALL BE CONSISTENT WITH OSHA REQUIREMENTS.

O.D. – OUTSIDE PIPE DIAMETER

HUNT
607 358 1000
FAX 358 1800
ENGINEERS•ARCHITECTS•SURVEYORS
AIRPORT CORPORATE PARK, 100 HUNT CENTER, HORSEHEADS, N.Y. 14845

SANITARY SEWER TRENCH SECTIONS

SANITARY SEWER DETAILS
TOWN OF ERWIN
STEUBEN COUNTY, NEW YORK

SA1
DETAIL

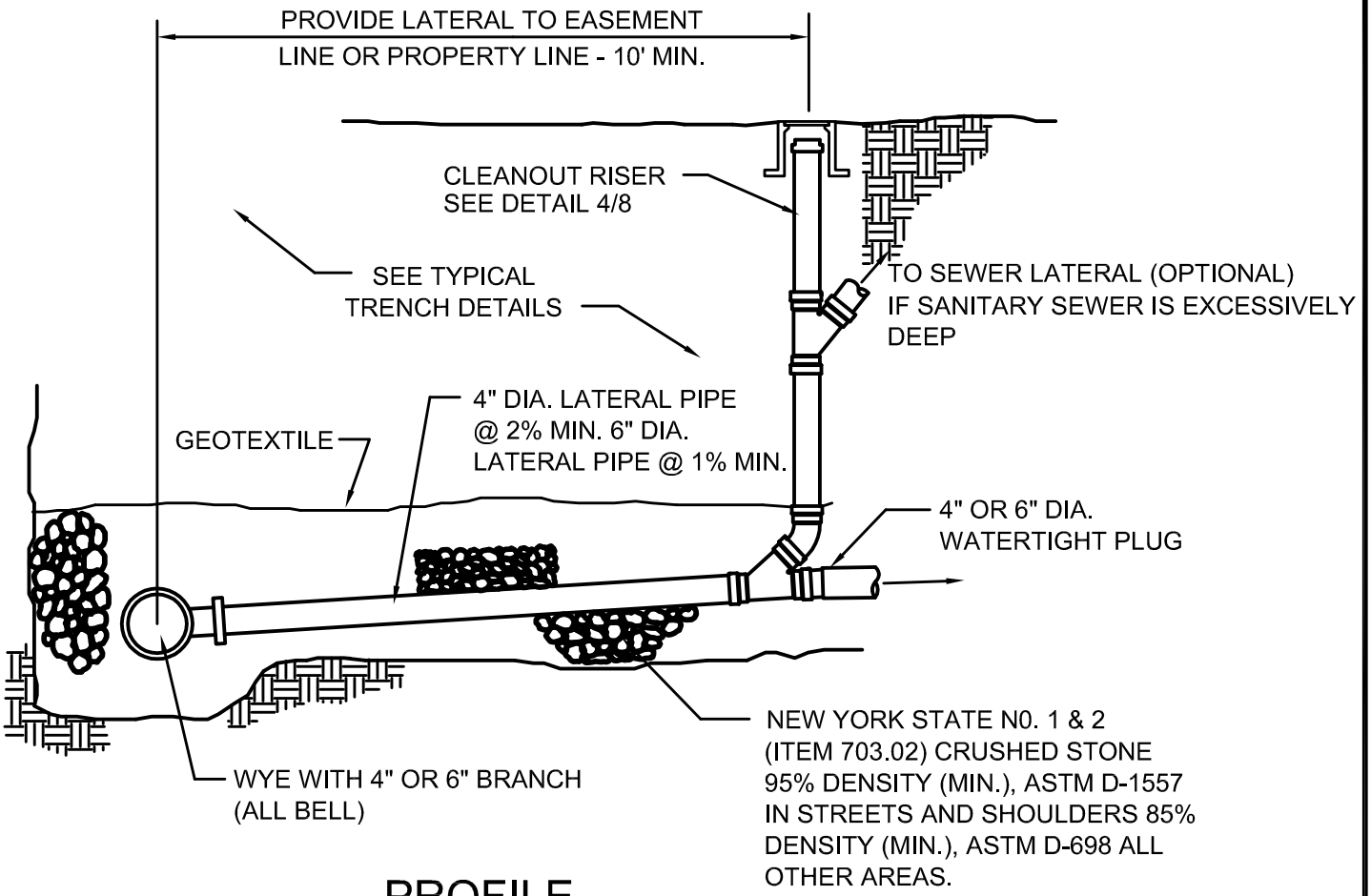

PROFILE

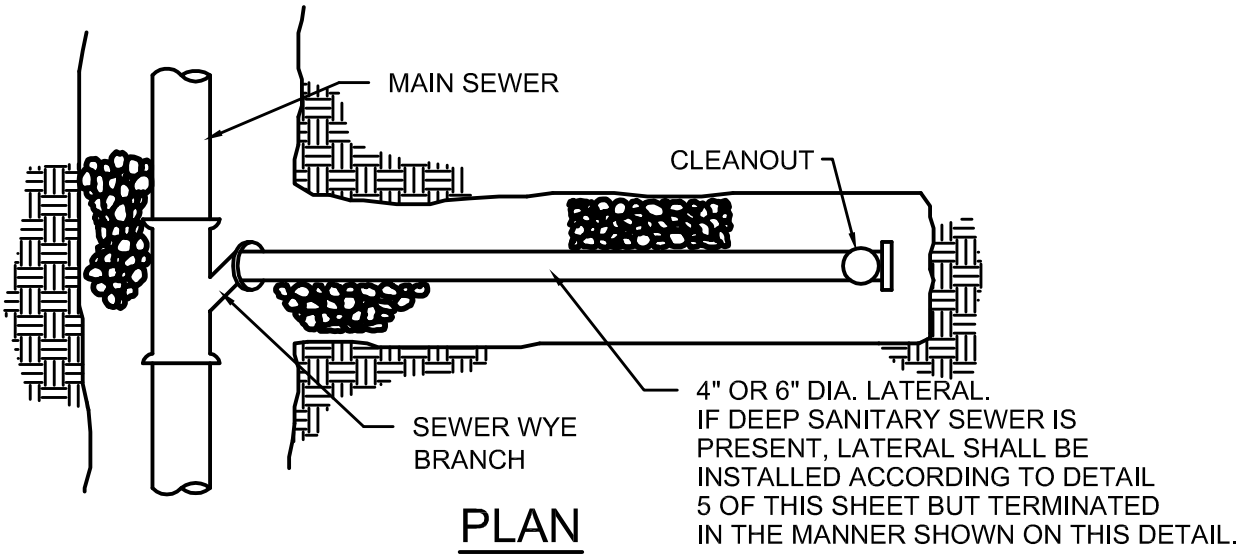

PLAN

1 SANITARY SEWER LATERAL INSTALLATION

SCALE: NOT TO SCALE

HUNT
607 358 1000
FAX 358 1800
ENGINEERS • ARCHITECTS • SURVEYORS
AIRPORT CORPORATE PARK, 100 HUNT CENTER, HORSEHEADS, N.Y. 14845

SANITARY SEWER LATERAL INSTALLATION

SANITARY SEWER DETAILS
TOWN OF ERWIN
STEUBEN COUNTY, NEW YORK

SA2
DETAIL

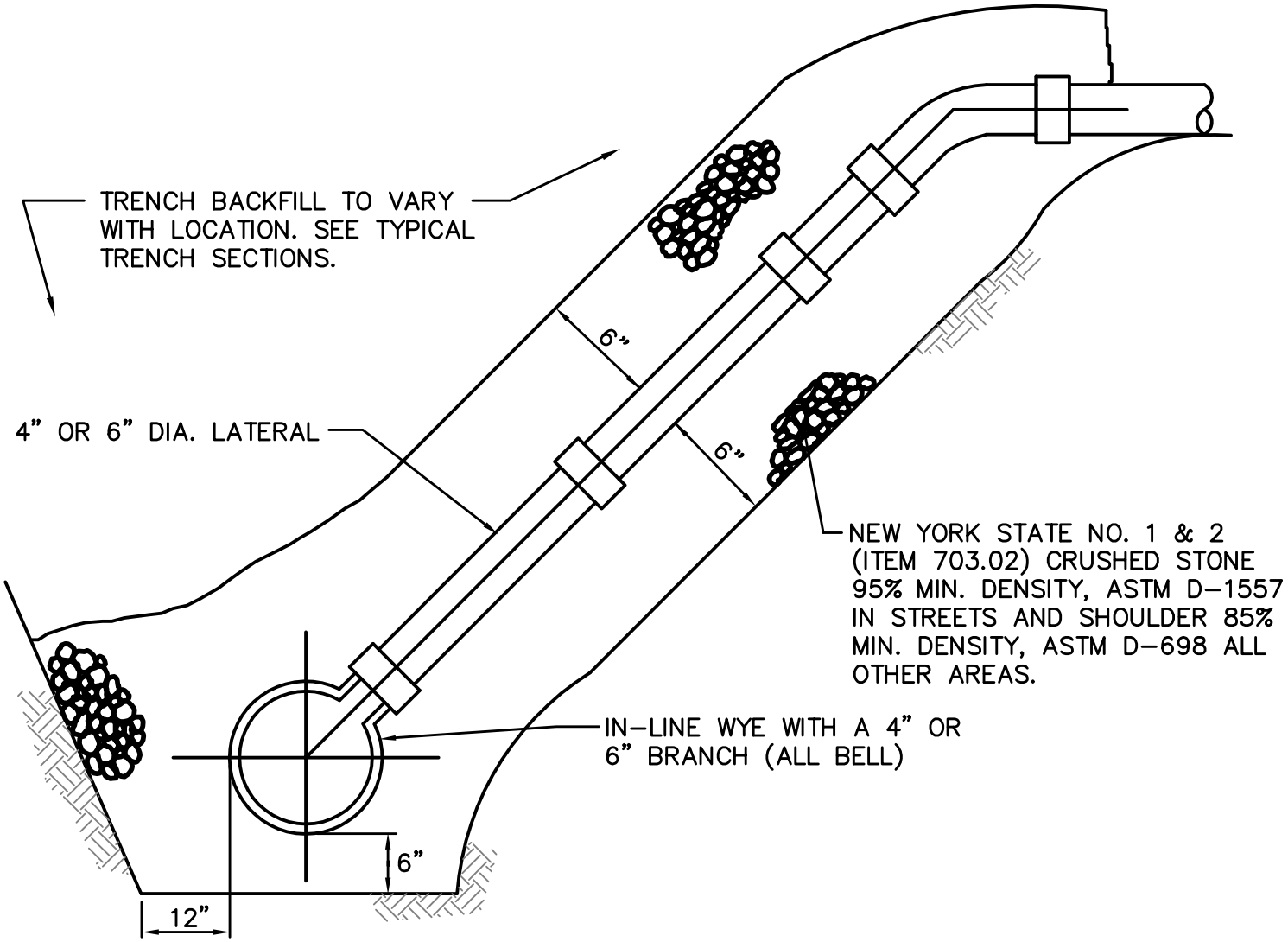

1 RISER DETAIL

SCALE: NOT TO SCALE

HUNT
607·358·1000
FAX·358·1800
ENGINEERS •ARCHITECTS• SURVEYORS
AIRPORT CORPORATE PARK, 100 HUNT CENTER, HORSEHEADS, N.Y. 14845

SANITARY SEWER LATERAL RISER DETAIL

SANITARY SEWER DETAILS
TOWN OF ERWIN
STEUBEN COUNTY, NEW YORK

SA3
DETAIL

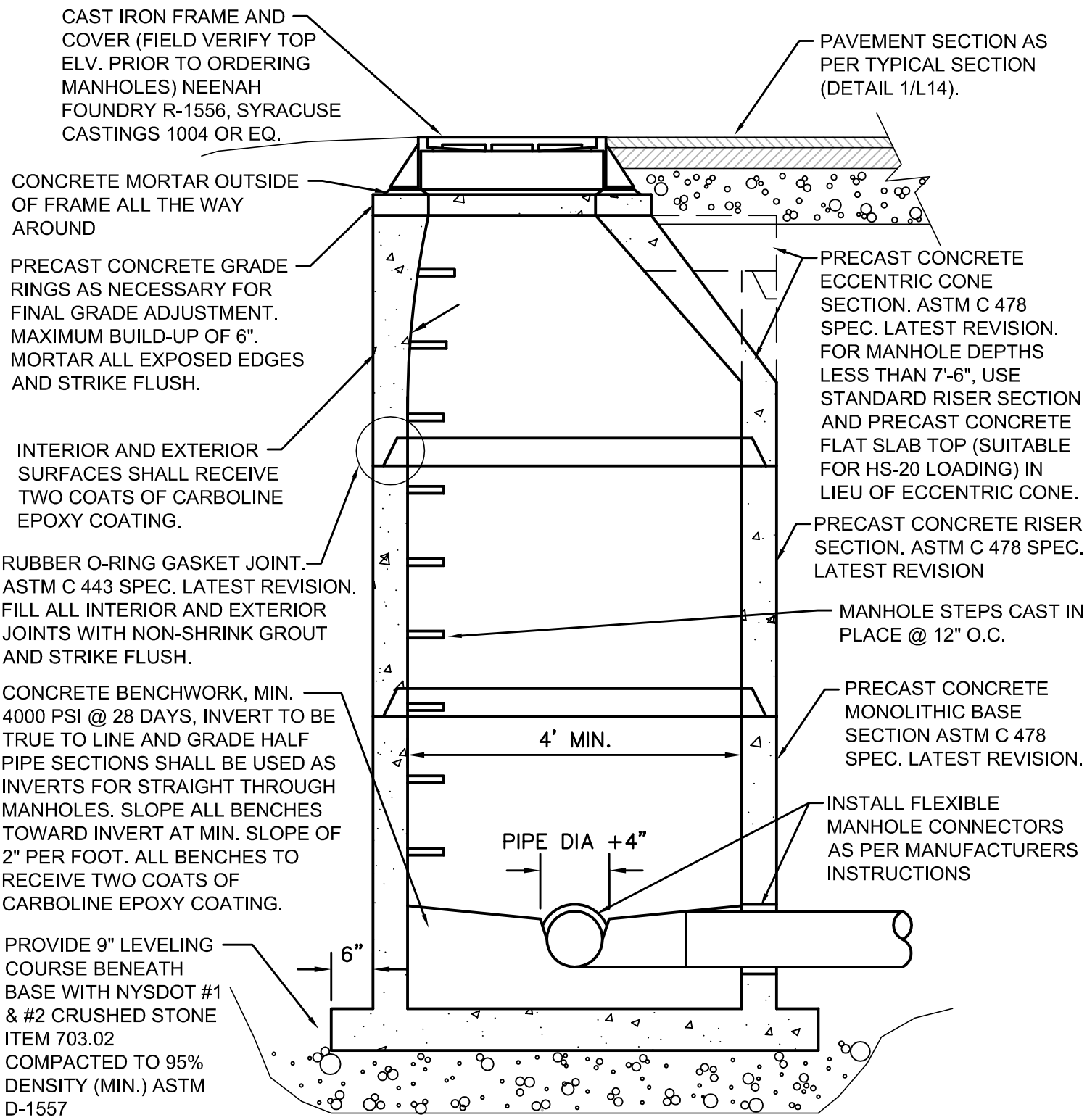

1 PRECAST CONCRETE SANITARY MANHOLE

SCALE: NOT TO SCALE

HUNT
607 358 1000
FAX 358 1800
ENGINEERS • ARCHITECTS • SURVEYORS
AIRPORT CORPORATE PARK, 100 HUNT CENTER, HORSEHEADS, N.Y. 14845

TYPICAL SANITARY SEWER MANHOLE

SANITARY SEWER DETAILS
TOWN OF ERWIN
STEUBEN COUNTY, NEW YORK

SA4
DETAIL

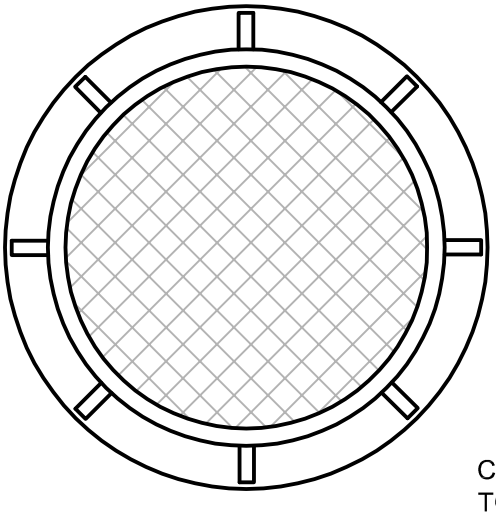

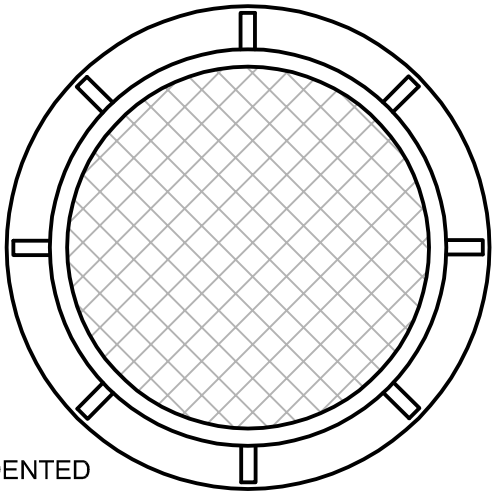

COVERS SHALL BE TYPE-B INDENTED TOP DESIGN WITH TYPE-F CONCEALED WATERTIGHT PICK HOLES. ALL COVERS SHALL HAVE CAST THE WORDS "SANITARY SEWER" IN LETTERS NOT LESS THAN 2" IN HEIGHT.

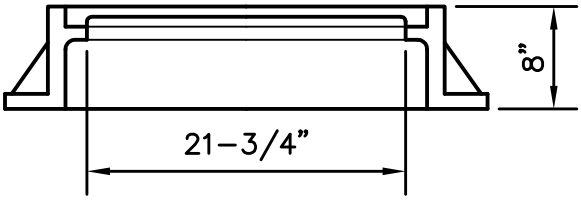

NEENAH FOUNDRY 1555
SYRACUSE CASTING 1007D OR
APPROVED EQUAL

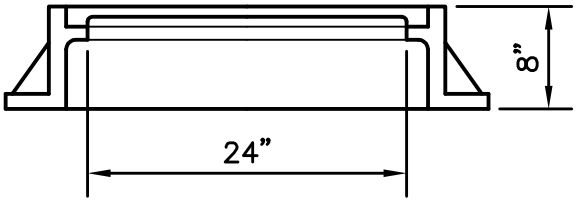

NEENAH FOUNDRY 1556
SYRACUSE CASTING 1009 OR
APPROVED EQUAL

1 MANHOLE FRAME AND COVER DETAILS

SCALE: NOT TO SCALE

HUNT
607 358 1000
FAX 358 1800
ENGINEERS • ARCHITECTS • SURVEYORS
AIRPORT CORPORATE PARK, 100 HUNT CENTER, HORSEHEADS, N.Y. 14845

SANITARY MANHOLE FRAME AND COVER DETAILS

SANITARY SEWER DETAILS
TOWN OF ERWIN
STEUBEN COUNTY, NEW YORK

SA5
DETAIL

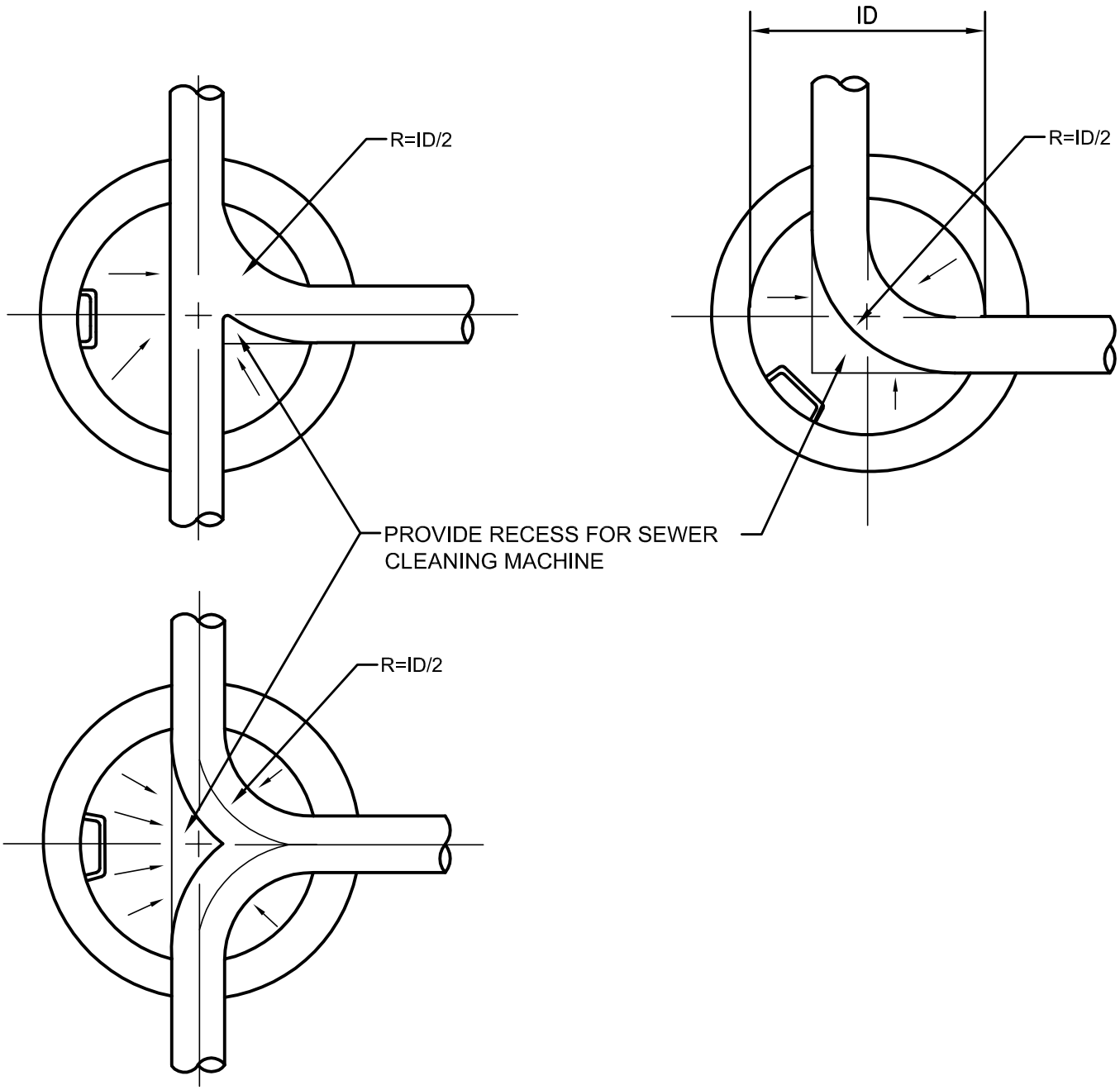

1 INVERT DETAILS

SCALE: NOT TO SCALE

HUNT
607 358 1000
FAX 358 1800
ENGINEERS•ARCHITECTS•SURVEYORS
AIRPORT CORPORATE PARK, 100 HUNT CENTER, HORSEHEADS, N.Y. 14845

SANITARY MANHOLE INVERT DETAILS

SANITARY SEWER DETAILS
TOWN OF ERWIN
STEUBEN COUNTY, NEW YORK

SA6
DETAIL

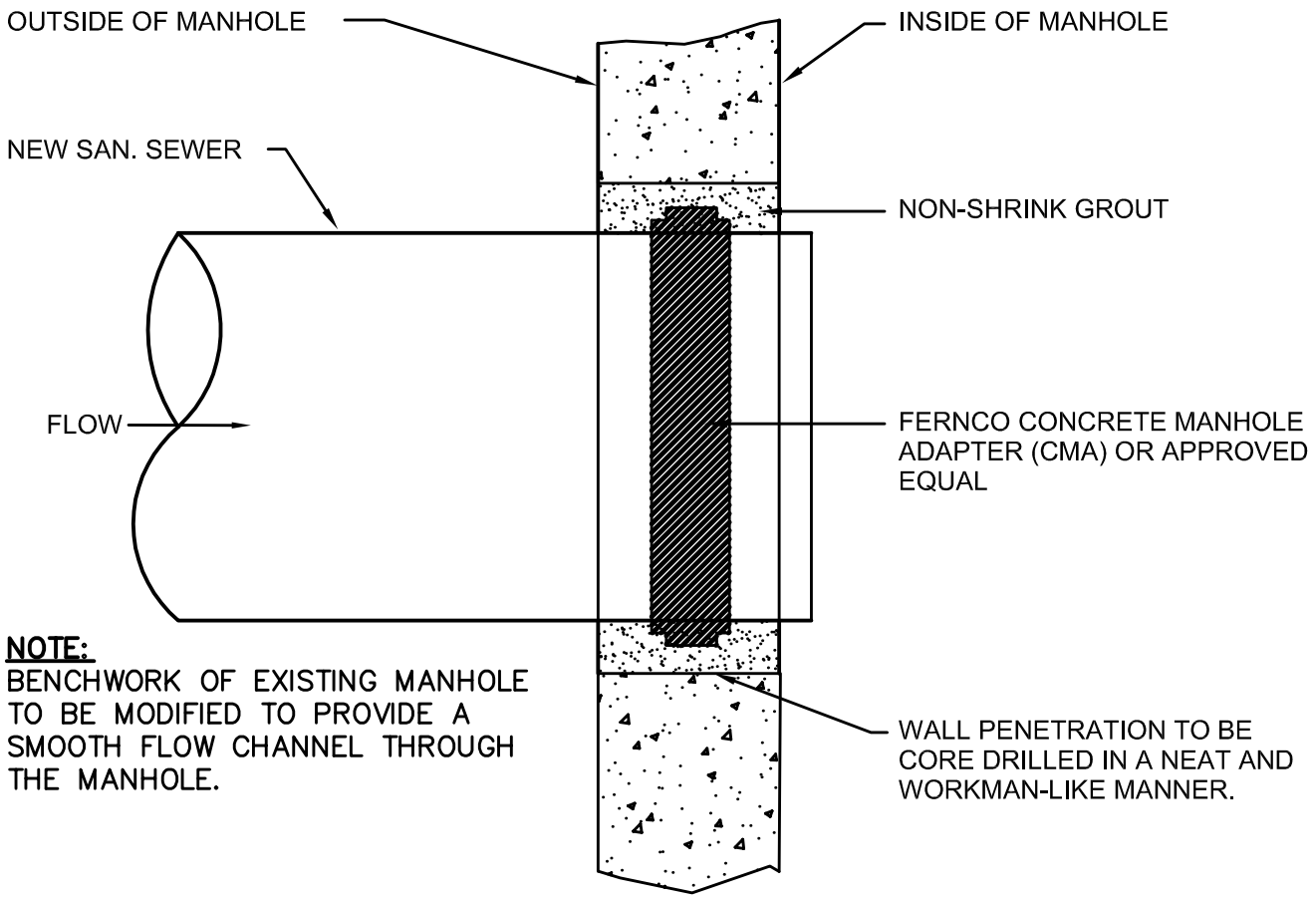

NOTE:
BENCHWORK OF EXISTING MANHOLE TO BE MODIFIED TO PROVIDE A SMOOTH FLOW CHANNEL THROUGH THE MANHOLE.

1 CONNECTION TO EXISTING MANHOLE DETAIL

SCALE: NOT TO SCALE

HUNT
607 358 1000
FAX 358 1800
ENGINEERS•ARCHITECTS•SURVEYORS
AIRPORT CORPORATE PARK, 100 HUNT CENTER, HORSEHEADS, N.Y. 14845

CONNECTION TO EXISTING MANHOLE DETAIL

SANITARY SEWER DETAILS
TOWN OF ERWIN
STEUBEN COUNTY, NEW YORK

SA7
DETAIL

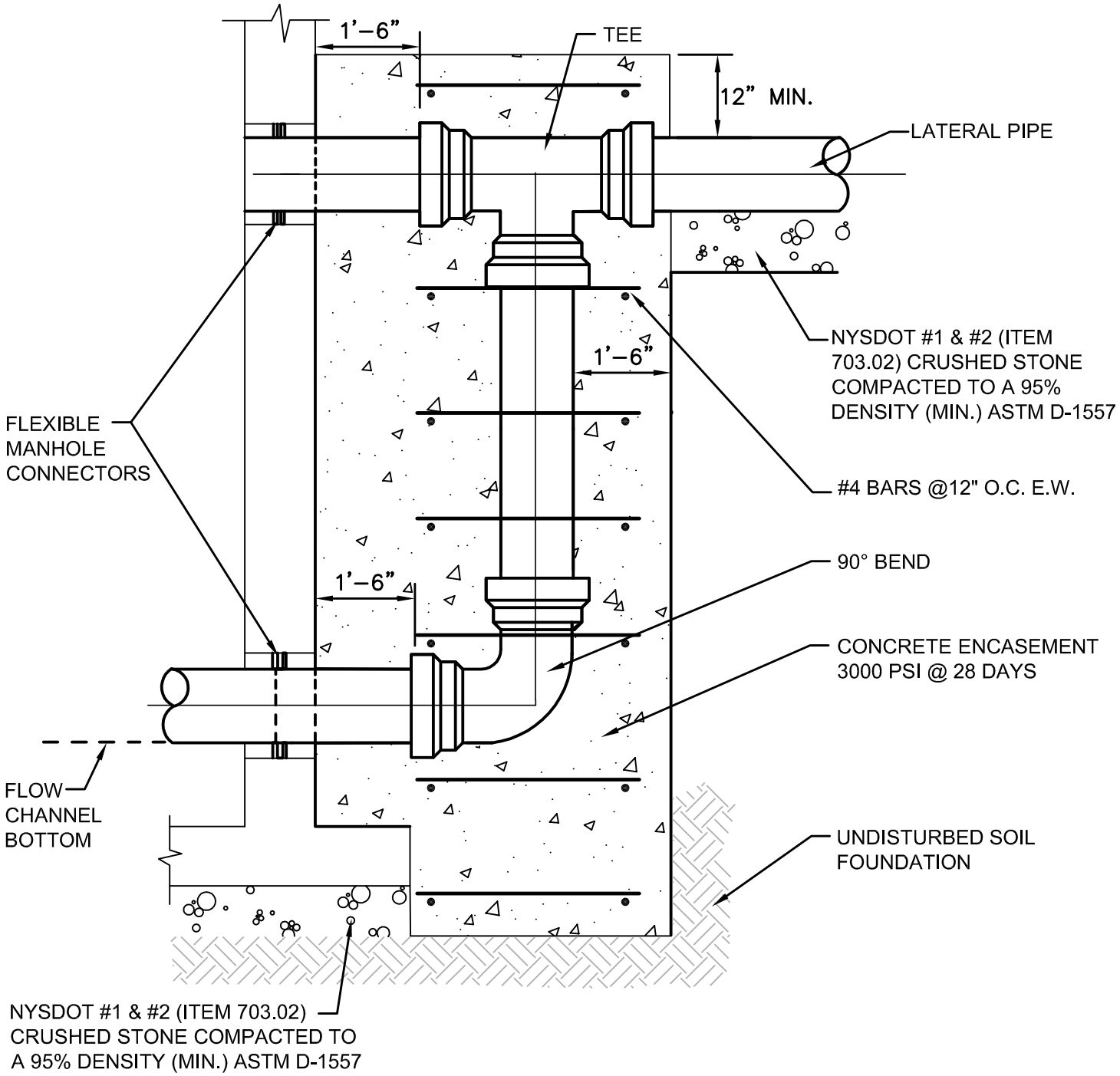

1 OUTSIDE DROP CONNECTION DETAIL

SCALE: NOT TO SCALE

HUNT
607 358 1000
FAX 358 1800
ENGINEERS•ARCHITECTS•SURVEYORS
AIRPORT CORPORATE PARK, 100 HUNT CENTER, HORSEHEADS, N.Y. 14845

OUTSIDE DROP CONNECTION DETAIL

SANITARY SEWER DETAILS
TOWN OF ERWIN
STEUBEN COUNTY, NEW YORK

SA8
DETAIL

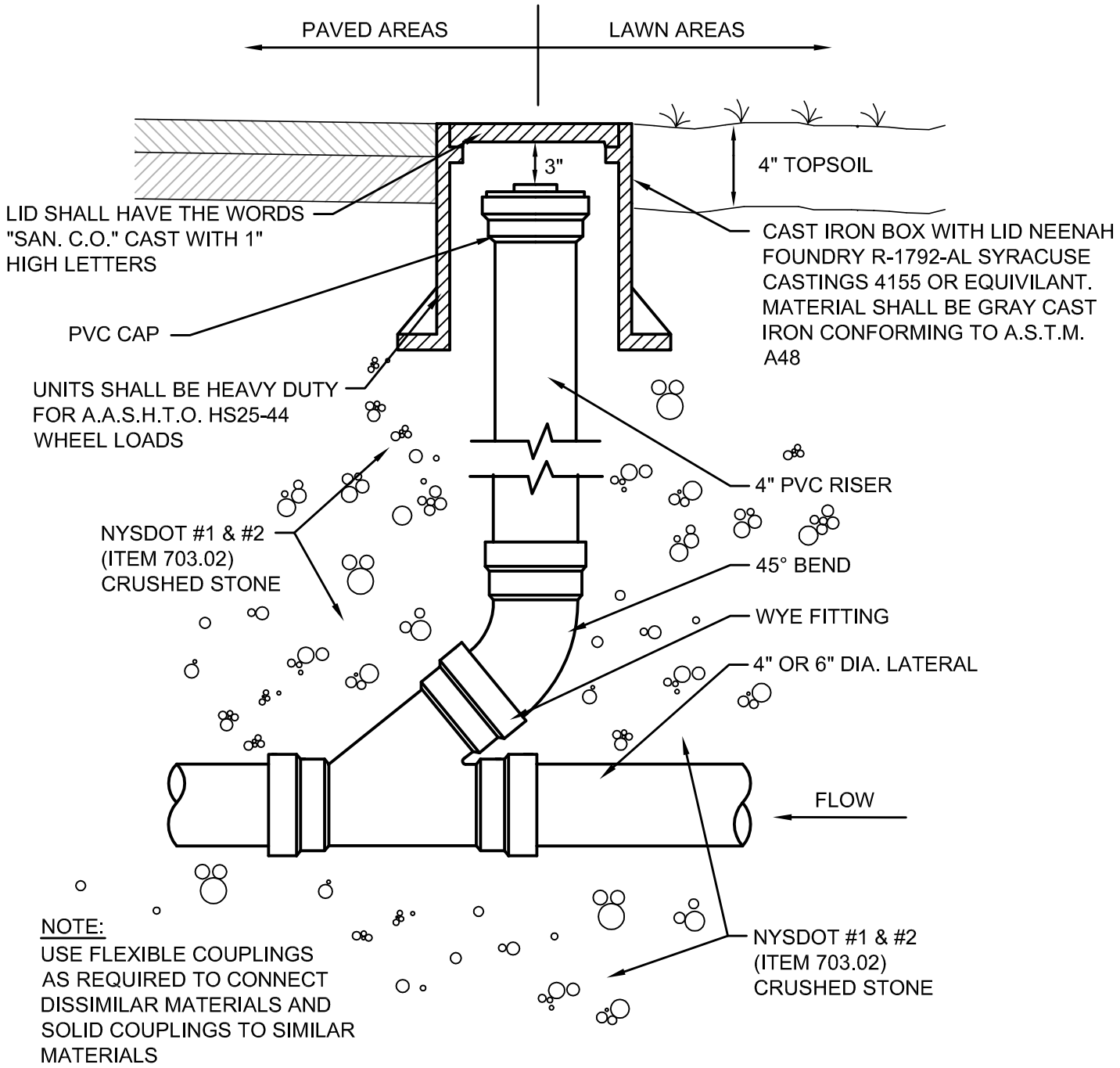

NOTE:
USE FLEXIBLE COUPLINGS AS REQUIRED TO CONNECT DISSIMILAR MATERIALS AND SOLID COUPLINGS TO SIMILAR MATERIALS

1 SANITARY CLEAN OUT DETAIL

SCALE: N.T.S.

HUNT
607 358 1000
FAX 358 1800
ENGINEERS • ARCHITECTS • SURVEYORS
AIRPORT CORPORATE PARK, 100 HUNT CENTER, HORSEHEADS, N.Y. 14845

SANITARY CLEANOUT DETAIL

SANITARY SEWER DETAILS
TOWN OF ERWIN
STEUBEN COUNTY, NEW YORK

SA9
DETAIL

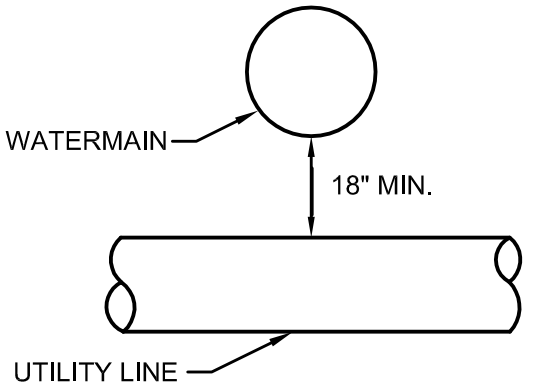

WATERMAIN ABOVE UTILITY LINE

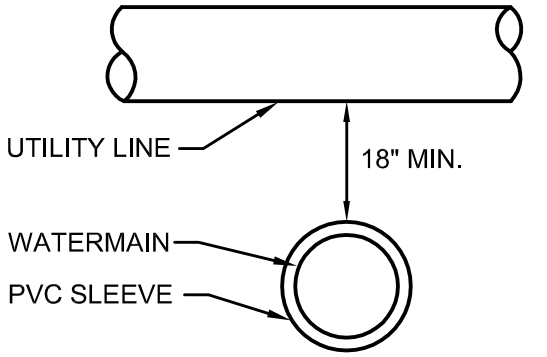

UTILITY LINE ABOVE WATERMAIN

NOTES:

1. AT CROSSINGS OF EXISTING SEWERS, ONE FULL LENGTH (20' MIN) OF WATER PIPE SHALL BE LOCATED SO BOTH JOINTS WILL BE AS FAR FROM THE SEWER AS POSSIBLE.
2. AT CROSSING OF NEW SEWERS, WATERLINE AND SEWER LINE PIPE LENGTHS SHALL BE CENTERED AT CROSSINGS. EACH LENGTH OF PIPE TO BE 20' MINIMUM
3. WHEN UTILITY LINES ARE ABOVE WATERMAINS, WATERMAINS SHALL BE INSTALLED WITH PVC CASING FOR 10' EACH SIDE OF THE CROSSING. SLEEVE TO BE CONTINUOUS, NO JOINTS, AND THE I.D. MUST BE 2" GREATER THAN THE O.D. OF THE CARRIER PIPE BELL DIMENSION.
4. DESCRIBED MEASURES ARE NOT ALLOWED FOR USE NEAR SEWER CATCH BASINS, DRYWELLS, MANHOLES, OR WHEN WATERMAIN IS INSTALLED WITHIN 10' AND PARALLEL TO SEWER.
5. BACKFILL AS A PER APPROPRIATE TRENCH DETAIL

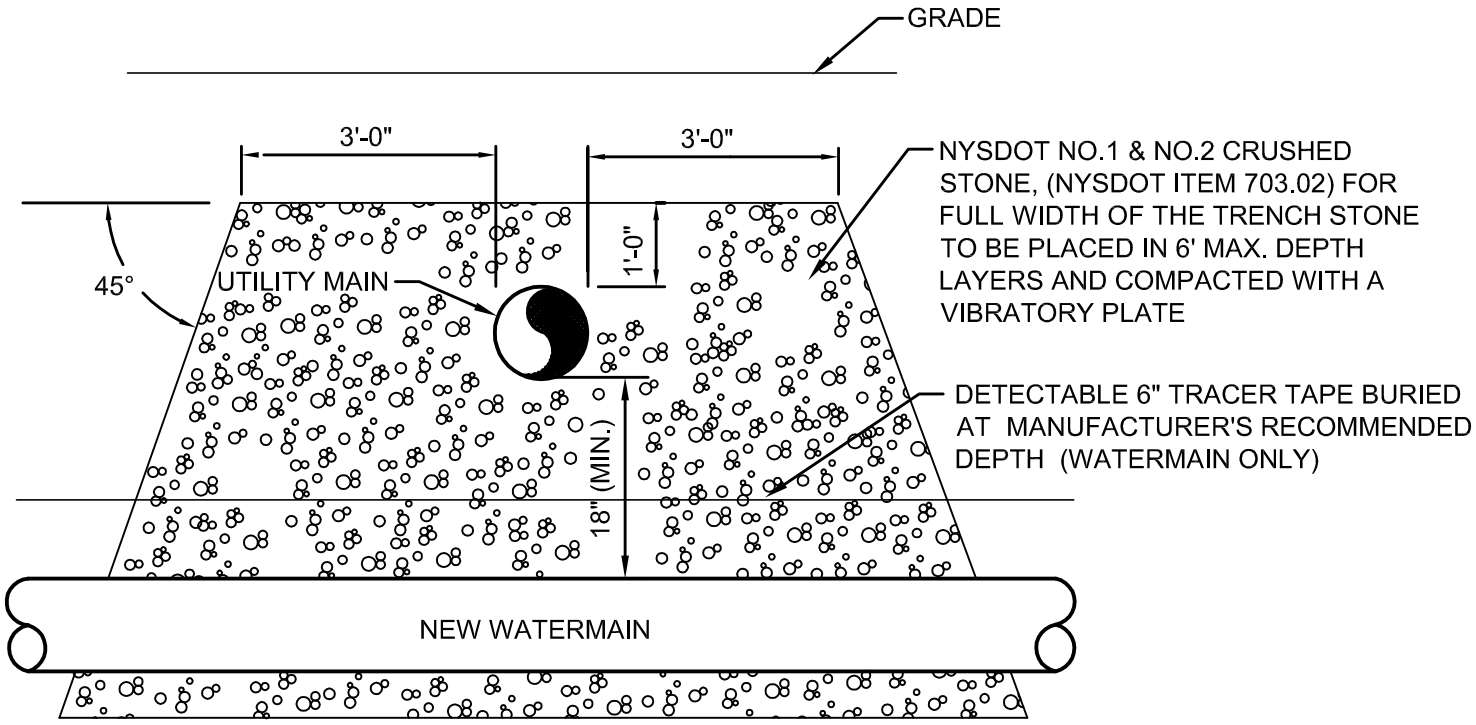

HUNT
607 358 1000
FAX 358 1800
ENGINEERS • ARCHITECTS • SURVEYORS
AIRPORT CORPORATE PARK, 100 HUNT CENTER, HORSEHEADS, N.Y. 14845

TYPICAL UTILITY CROSSING DETAILS

SANITARY SEWER DETAILS
TOWN OF ERWIN
STEUBEN COUNTY, NEW YORK

SA10
DETAIL

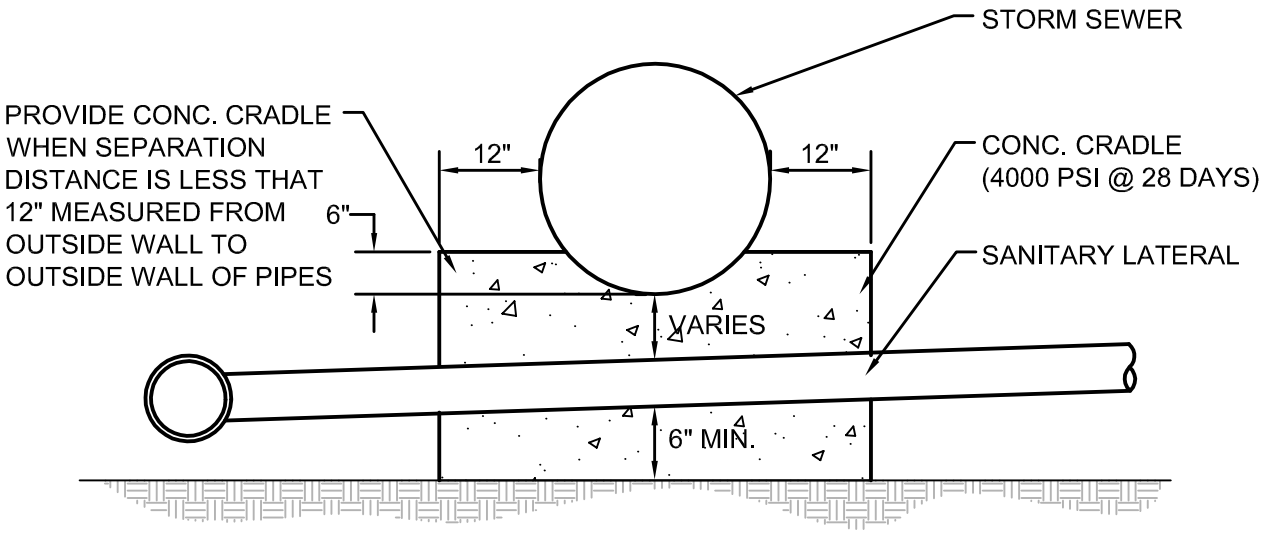

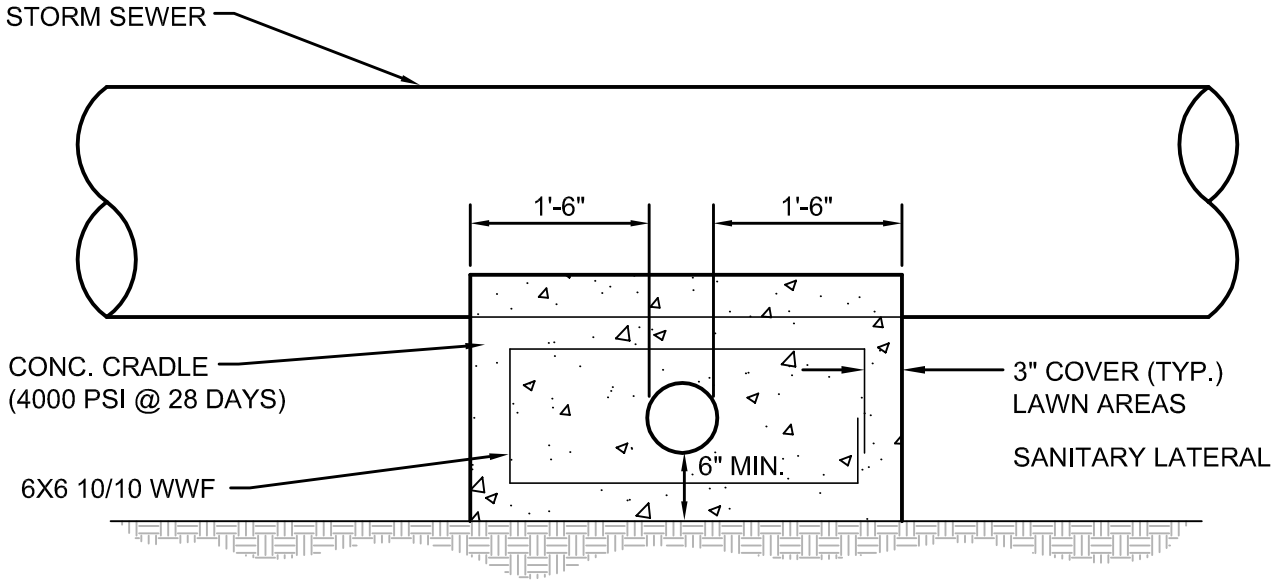

1 SEWER PIPE CRADLE DETAIL

SCALE: N.T.S.

HUNT
607 358 1000
FAX 358 1800
ENGINEERS • ARCHITECTS • SURVEYORS
AIRPORT CORPORATE PARK, 100 HUNT CENTER, HORSEHEADS, N.Y. 14845

SEWER PIPE CRADLE DETAIL

SANITARY SEWER DETAILS
TOWN OF ERWIN
STEUBEN COUNTY, NEW YORK

SA11
DETAIL

STORM SEWER DETAILS

TOWN OF ERWIN
STEUBEN COUNTY, NEW YORK

MAY 2012

HUNT

607 358 1000
FAX 358 1800

ENGINEERS ARCHITECTS SURVEYORS

AIRPORT CORPORATE PARK, 100 HUNT CENTER, HORSEHEADS, N.Y. 14845

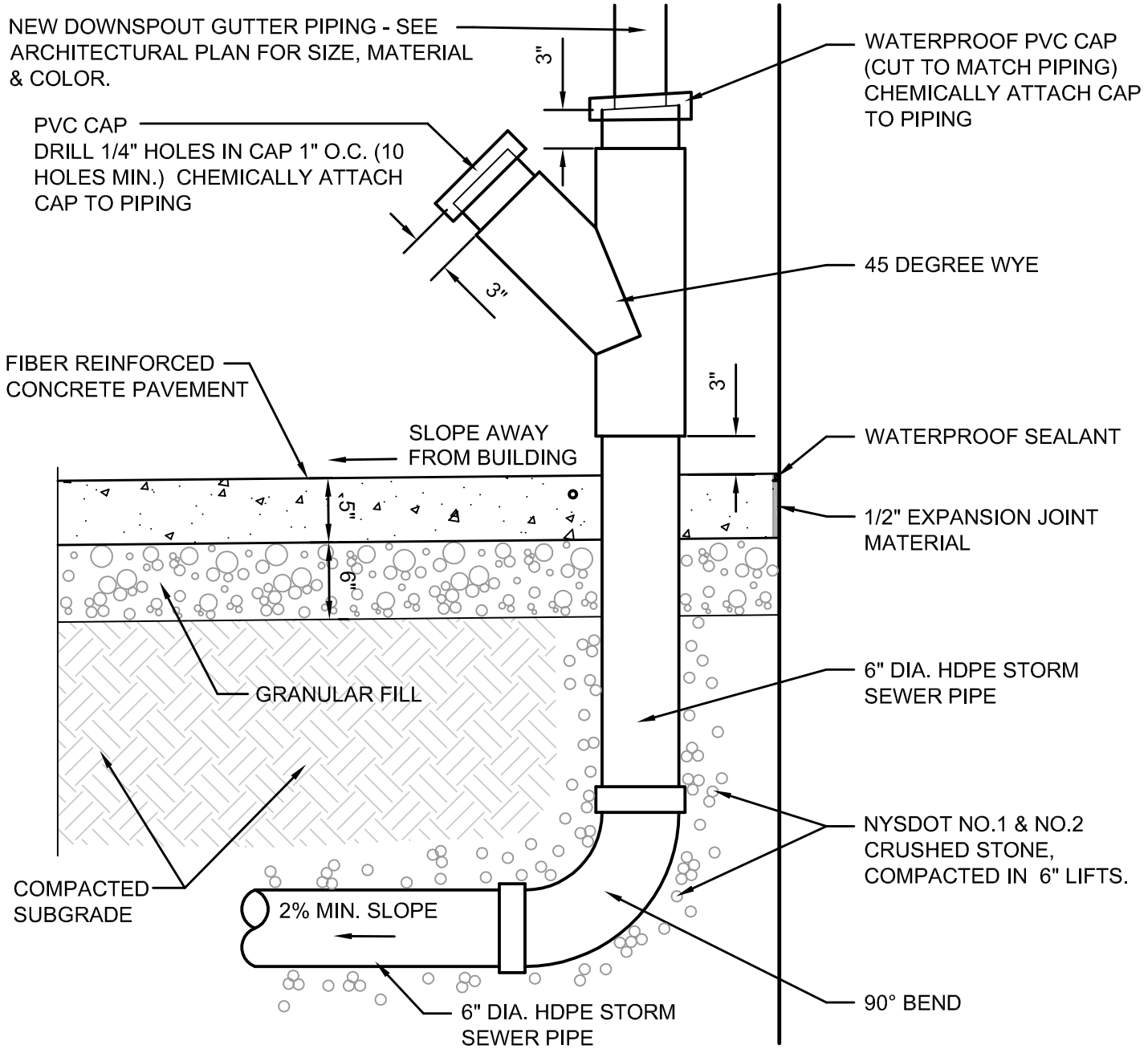

1 DOWNSPOUT ADAPTER DETAIL

SCALE: NOT TO SCALE

HUNT
607 358 1000
FAX 358 1800
ENGINEERS•ARCHITECTS•SURVEYORS
AIRPORT CORPORATE PARK, 100 HUNT CENTER, HORSEHEADS, N.Y. 14845

ROOF DOWNSPOUT ADAPTER DETAIL

STORM SEWER DETAILS
TOWN OF ERWIN
STEUBEN COUNTY, NEW YORK

ST1
DETAIL

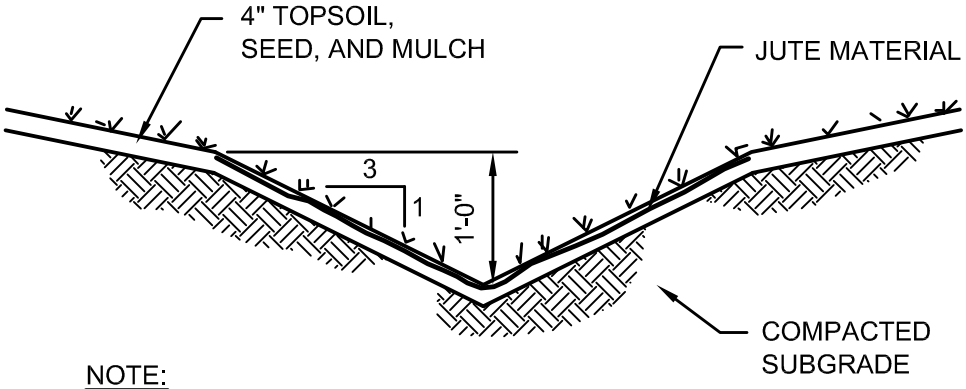

NOTE:
FOR LONGITUDINAL CHANNEL SLOPES OF 3 PERCENT OR LESS.

1 GRASSED DITCH DETAIL

SCALE: NOT TO SCALE

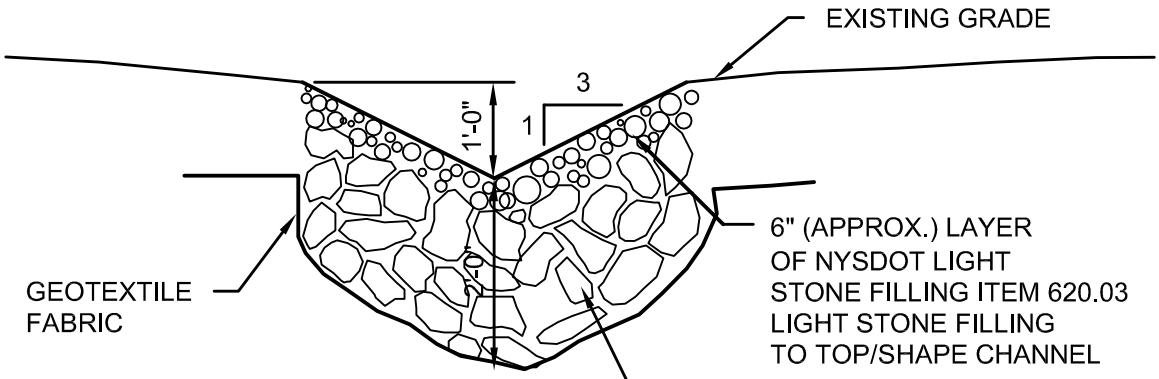

NOTE:
FOR LONGITUDINAL CHANNEL SLOPES OF MORE THAN 3.0 PERCENT

2 STONE LINED DITCH DETAIL

SCALE: NOT TO SCALE

HUNT
607 358 1000
FAX 358 1800
ENGINEERS • ARCHITECTS • SURVEYORS
AIRPORT CORPORATE PARK, 100 HUNT CENTER, HORSEHEADS, N.Y. 14845

SWALE/ DITCH TREATMENT DETAILS

STORM SEWER DETAILS
TOWN OF ERWIN
STEUBEN COUNTY, NEW YORK

ST2
DETAIL

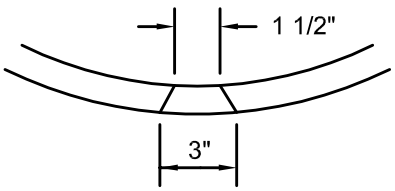

DRAIN HOLE DETAIL

NOTE:
DRYWELL TO BE CERTIFIED TO CARRY
H20-44 HIGHWAY LOADING AS MANUFACTURED
BY ZEISER-WILBERT VAULT OR EQUAL

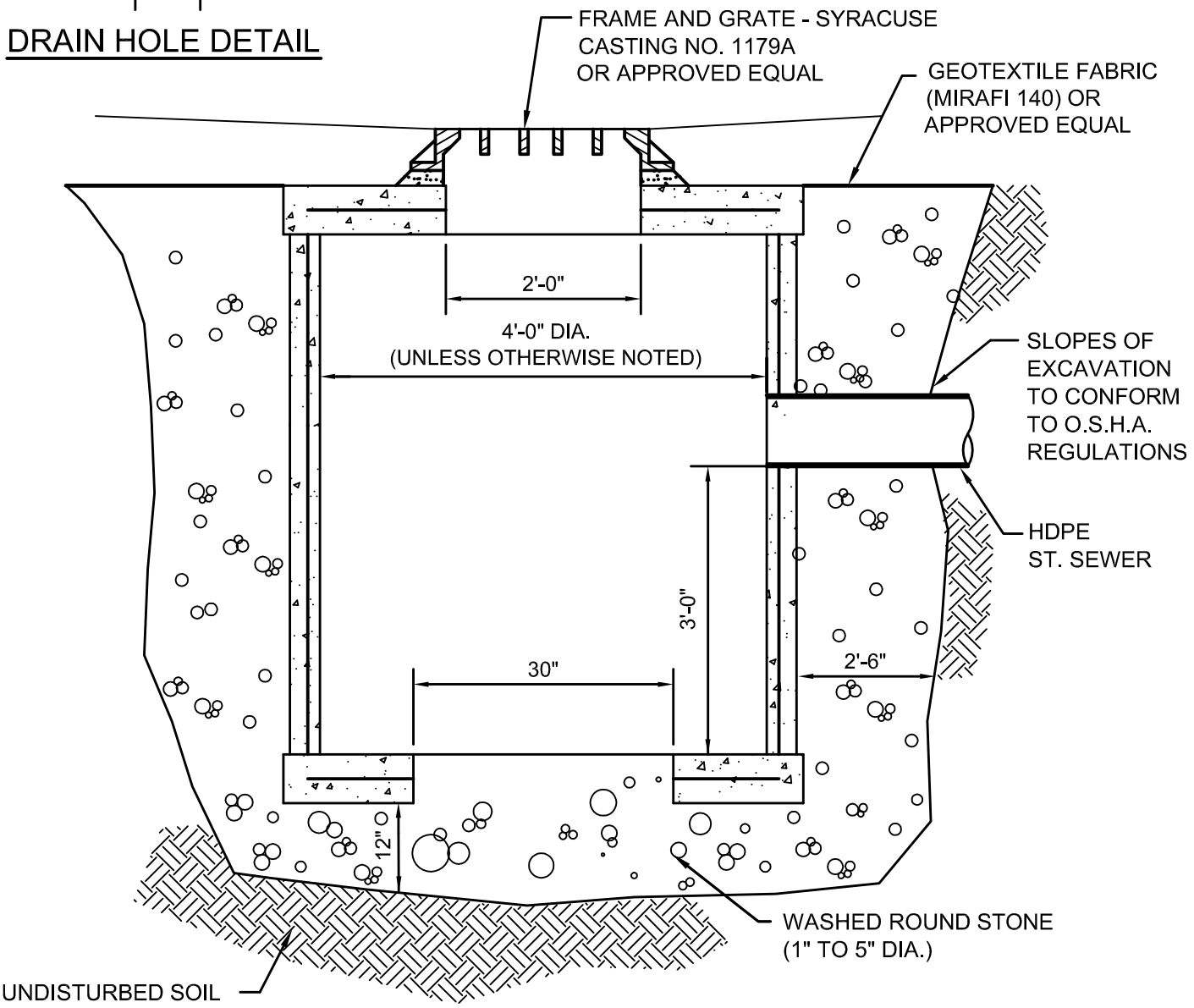

1 DRYWELL DETAIL

SCALE: NOT TO SCALE

HUNT
607 358 1000
FAX 358 1800
ENGINEERS • ARCHITECTS • SURVEYORS
AIRPORT CORPORATE PARK, 100 HUNT CENTER, HORSEHEADS, N.Y. 14845

TYPICAL DRYWELL DETAIL

STORM SEWER DETAILS
TOWN OF ERWIN
STEUBEN COUNTY, NEW YORK

ST3
DETAIL

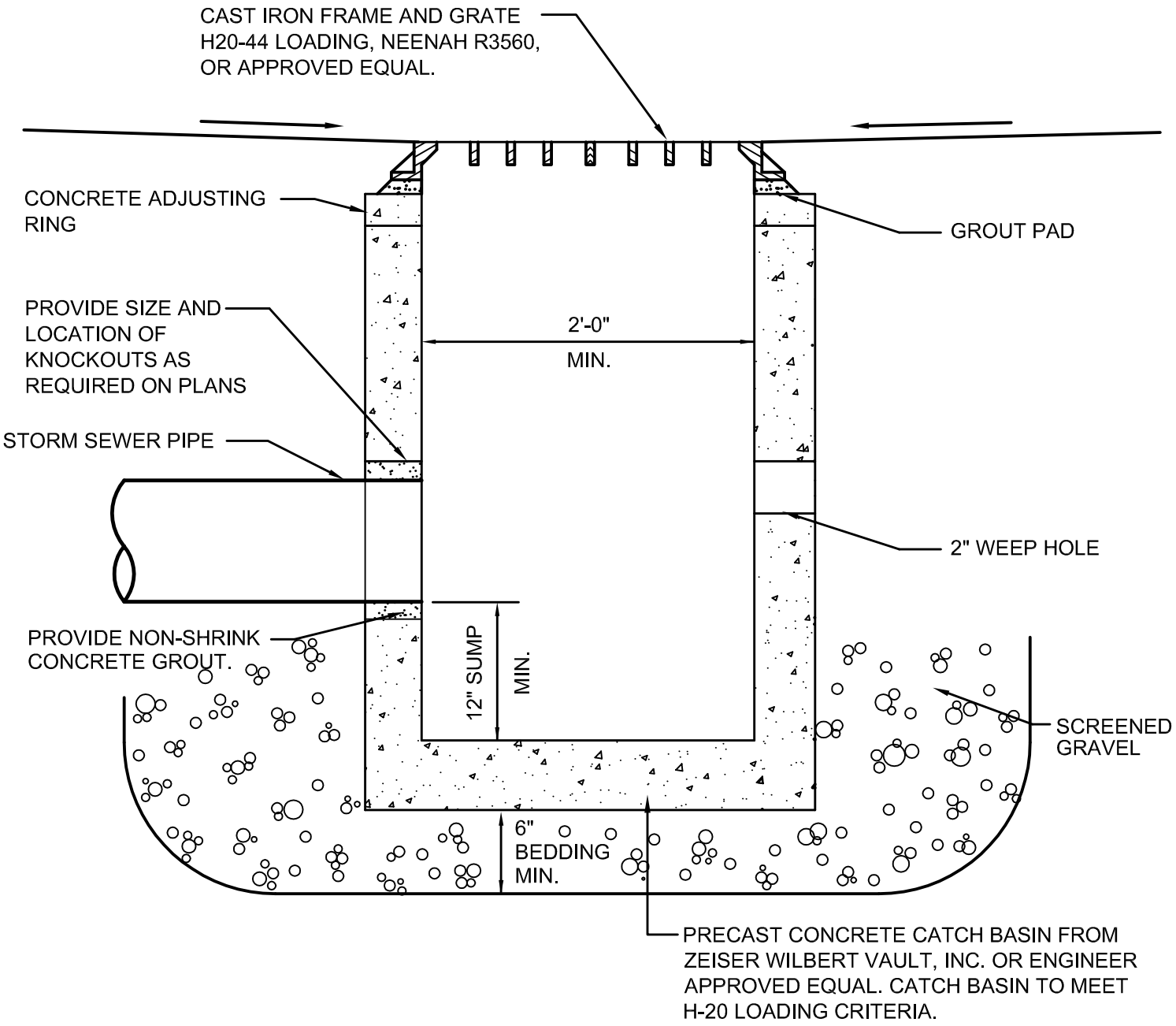

1 CATCH BASIN DETAIL

SCALE: NOT TO SCALE

HUNT
607 358 1000
FAX 358 1800
ENGINEERS • ARCHITECTS • SURVEYORS
AIRPORT CORPORATE PARK, 100 HUNT CENTER, HORSEHEADS, N.Y. 14845

TYPICAL CATCH BASIN DETAIL

STORM SEWER DETAILS
TOWN OF ERWIN
STEUBEN COUNTY, NEW YORK

ST4
DETAIL

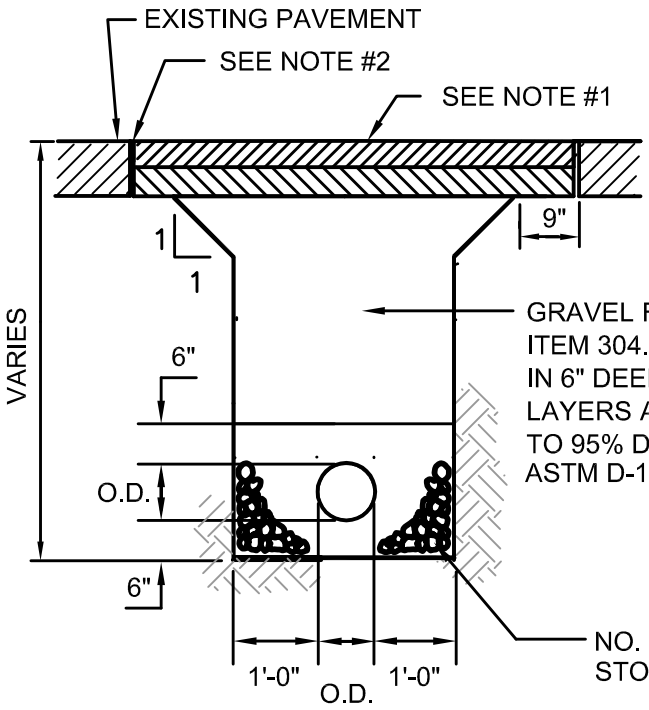

EXG. PAVED ROADWAYS

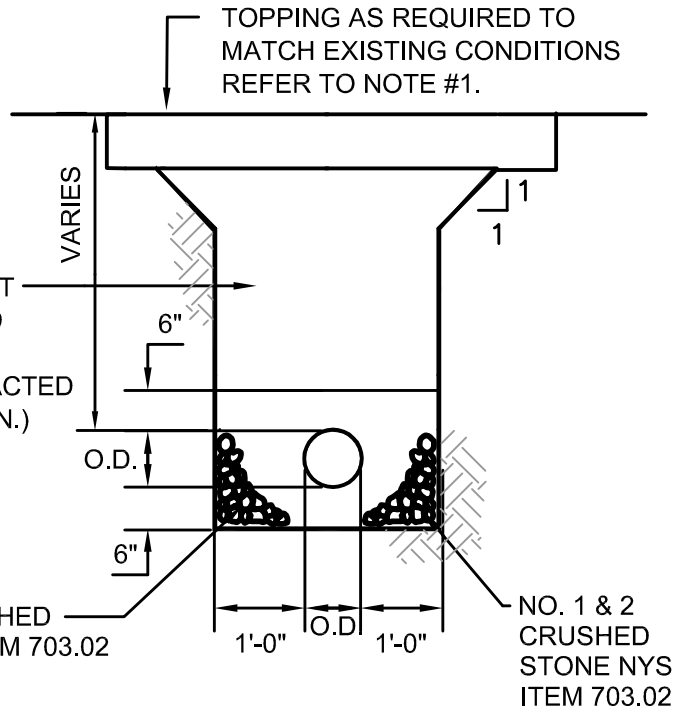

FUTURE & NON-PAVED ROADWAYS

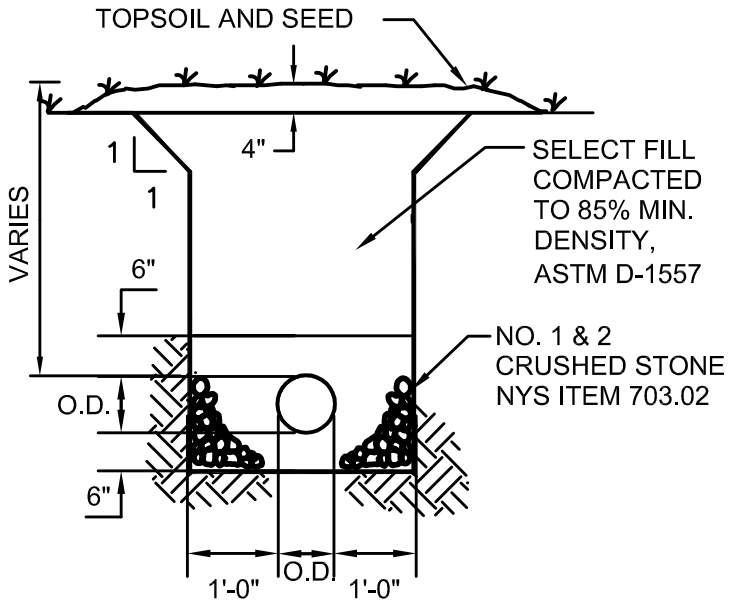

LAWNS/FIELDS

NOTES:

1. PAVEMENT CONSTRUCTION AND SEWER INSTALLATION SHALL CONFORM TO THE TOWN OF ERWIN'S STANDARD SPECIFICATIONS FOR HIGHWAY CONSTRUCTION, WATER DISTRIBUTION, AND WASTEWATER COLLECTION SYSTEMS CONSTRUCTION, OCT. 1990.
2. JOINTS SHALL BE SAW CUT THROUGH EXISTING SURFACE COURSE AND EDGES SEALED WITH TACK COAT AND ALL SEAMS SHALL BE SEALED WITH CRACK SEAL.
3. ALL EXCAVATION SHALL BE CONSISTENT WITH OSHA REQUIREMENTS.
4. HDPE AND COUPLINGS SHALL BE INSTALLED IN STRICT CONFORMANCE TO MANUFACTURER'S RECOMMENDATIONS.

O.D. – OUTSIDE PIPE DIAMETER

HUNT
607 358 1000
FAX 358 1800
ENGINEERS•ARCHITECTS•SURVEYORS
AIRPORT CORPORATE PARK, 100 HUNT CENTER, HORSEHEADS, N.Y. 14845

TYPICAL STORM SEWER TRENCH SECTIONS

STORM SEWER DETAILS
TOWN OF ERWIN
STEUBEN COUNTY, NEW YORK

ST5
DETAIL

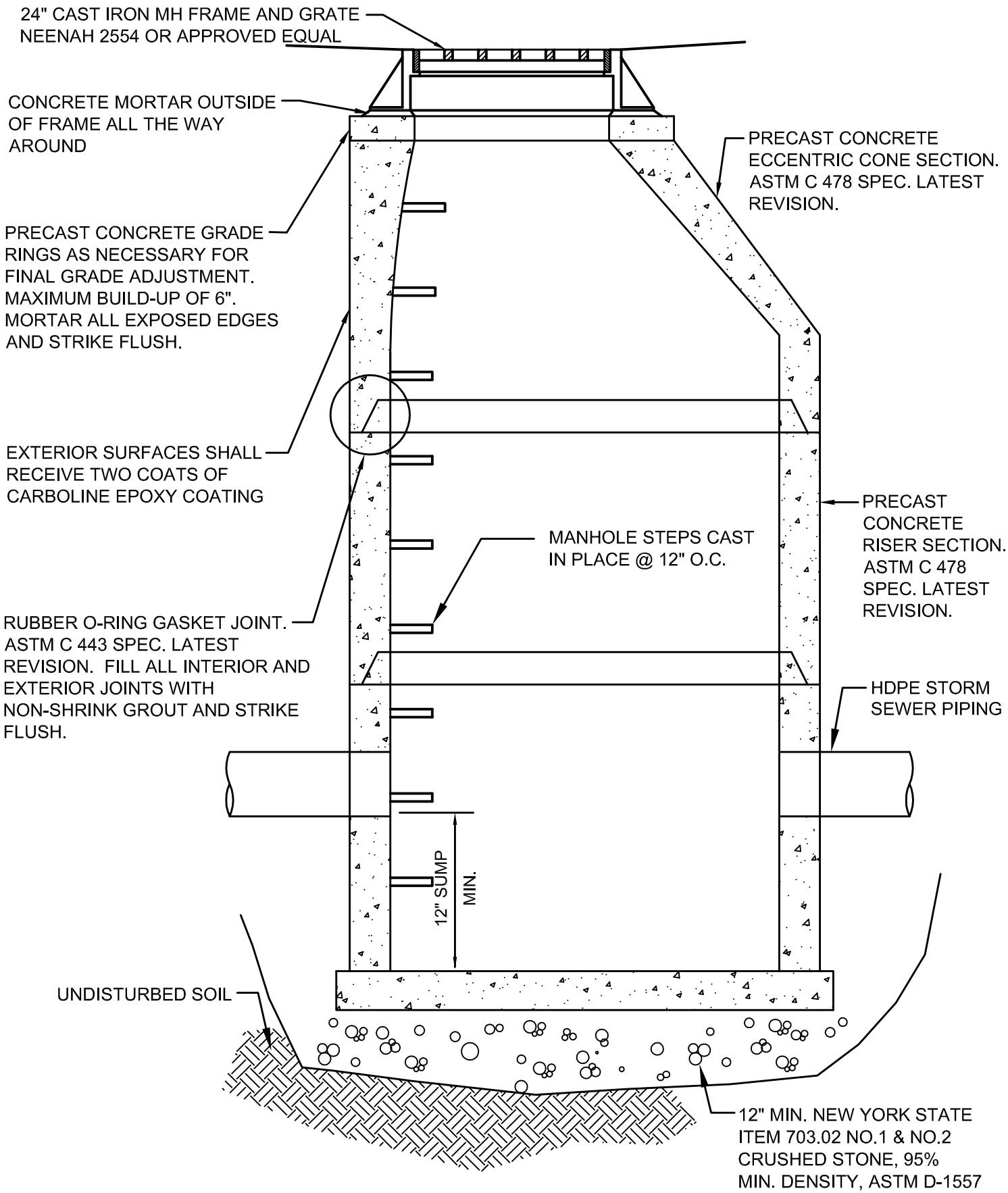

HUNT
607 358 1000
FAX 358 1800
ENGINEERS • ARCHITECTS • SURVEYORS
AIRPORT CORPORATE PARK, 100 HUNT CENTER, HORSEHEADS, N.Y. 14845

TYPICAL STORM MANHOLE DETAIL

STORM SEWER DETAILS
TOWN OF ERWIN
STEUBEN COUNTY, NEW YORK

ST6
DETAIL

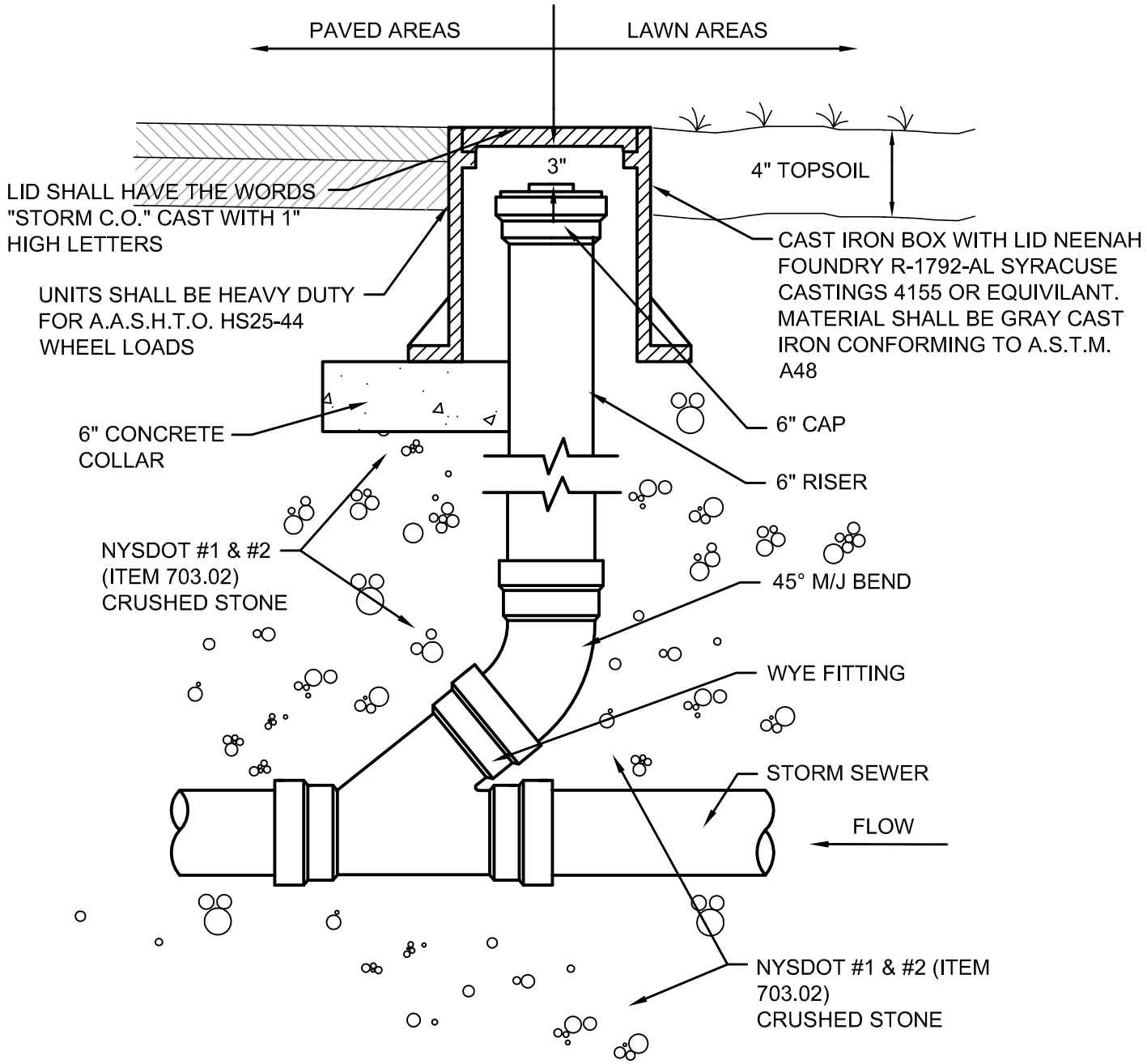

1 STORM SEWER CLEANOUT DETAIL

SCALE: N.T.S.

HUNT
607 358 1000
FAX 358 1800
ENGINEERS • ARCHITECTS • SURVEYORS
AIRPORT CORPORATE PARK, 100 HUNT CENTER, HORSEHEADS, N.Y. 14845

STORM CLEANOUT DETAIL

STORM SEWER DETAILS
TOWN OF ERWIN
STEUBEN COUNTY, NEW YORK

ST7
DETAIL

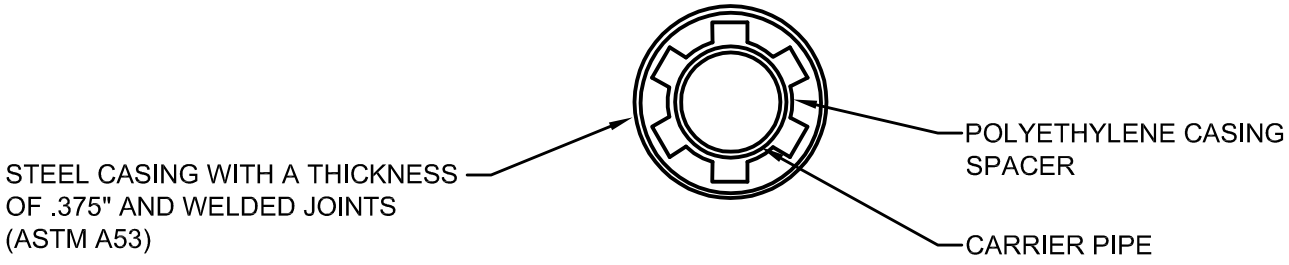

ENCASEMENT SECTION

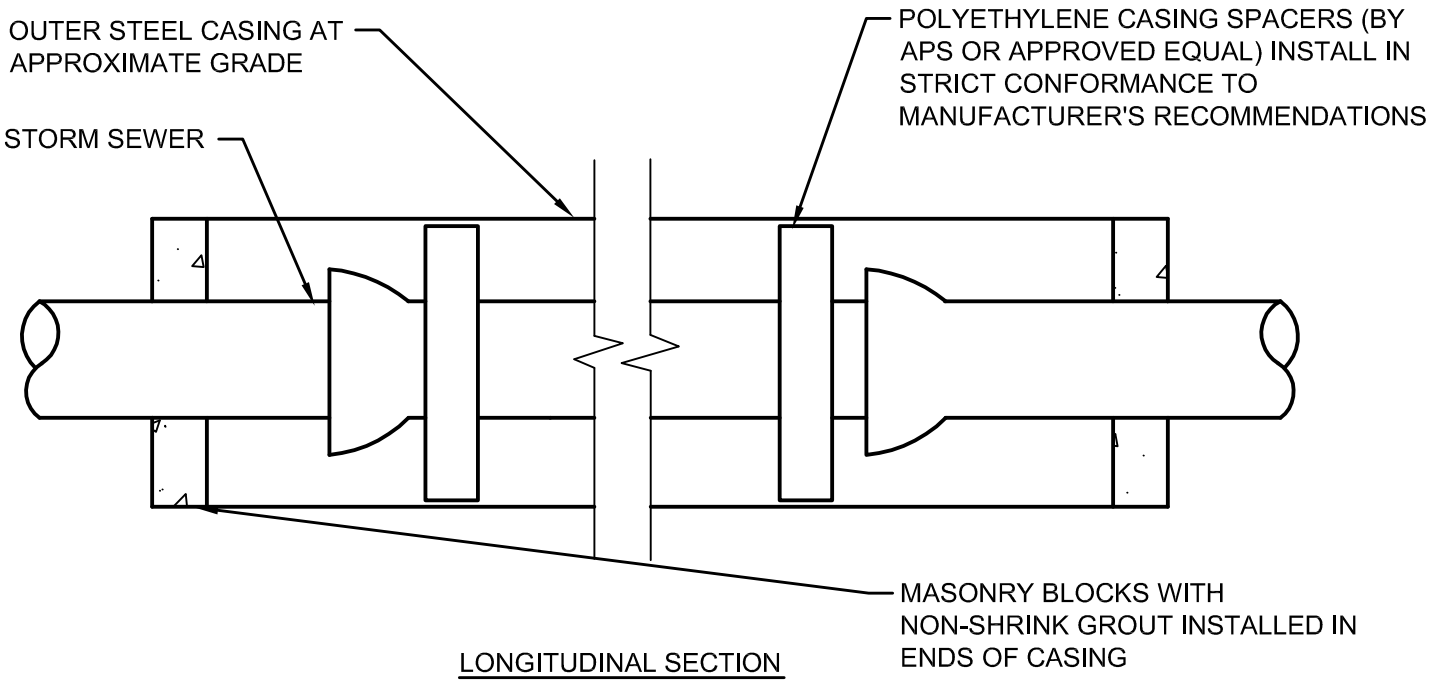

LONGITUDINAL SECTION

1 PIPE CASING DETAIL

SCALE: N.T.S.

HUNT
607 358 1000
FAX 358 1800
ENGINEERS • ARCHITECTS • SURVEYORS
AIRPORT CORPORATE PARK, 100 HUNT CENTER, HORSEHEADS, N.Y. 14845

PIPE CASING DETAIL

STORM SEWER DETAILS
TOWN OF ERWIN
STEUBEN COUNTY, NEW YORK

ST8
DETAIL

WATER UTILITY DETAILS

TOWN OF ERWIN
STEUBEN COUNTY, NEW YORK

MAY 2012

HUNT

607 358 1000
FAX 358 1800

ENGINEERS ARCHITECTS SURVEYORS

AIRPORT CORPORATE PARK, 100 HUNT CENTER, HORSEHEADS, N.Y. 14845

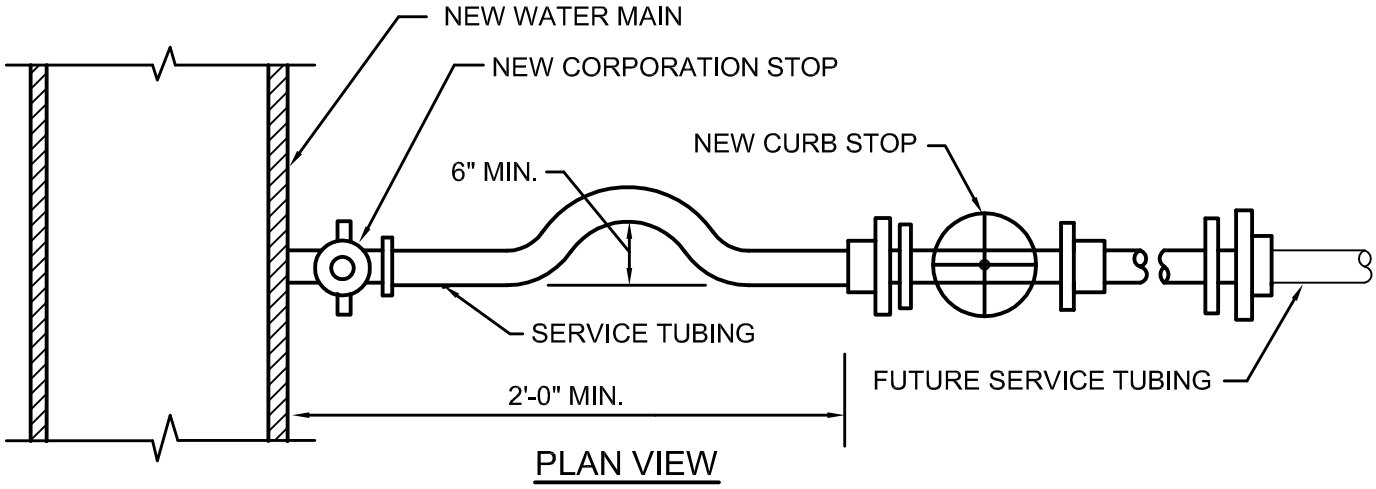

PLAN VIEW

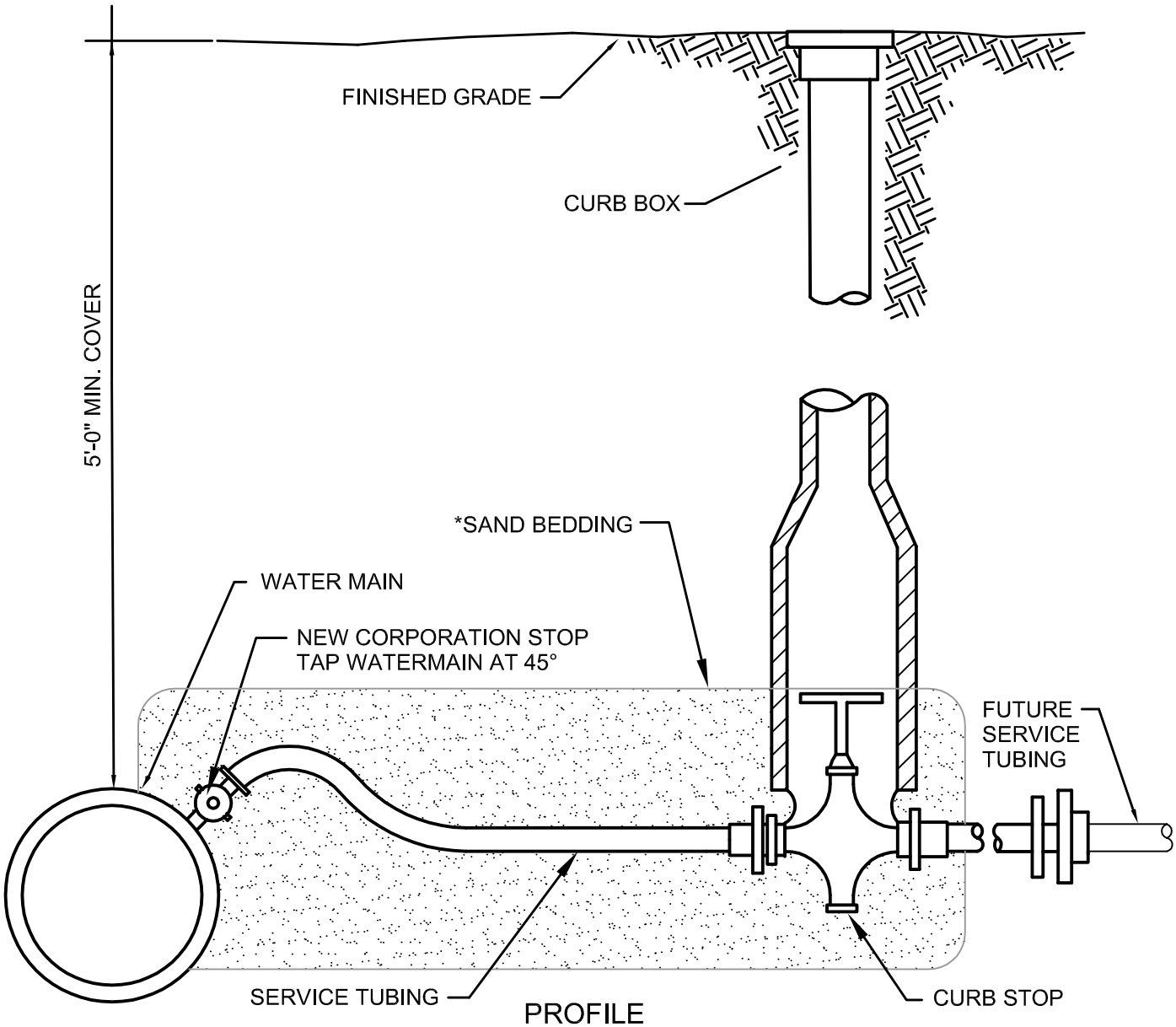

PROFILE

HUNT
607 358 1000
FAX 358 1800
ENGINEERS • ARCHITECTS • SURVEYORS
AIRPORT CORPORATE PARK, 100 HUNT CENTER, HORSEHEADS, N.Y. 14845

WATER SERVICE INSTALLATION DETAIL

WATER UTILITY DETAILS
TOWN OF ERWIN
STEUBEN COUNTY, NEW YORK

W1
DETAIL

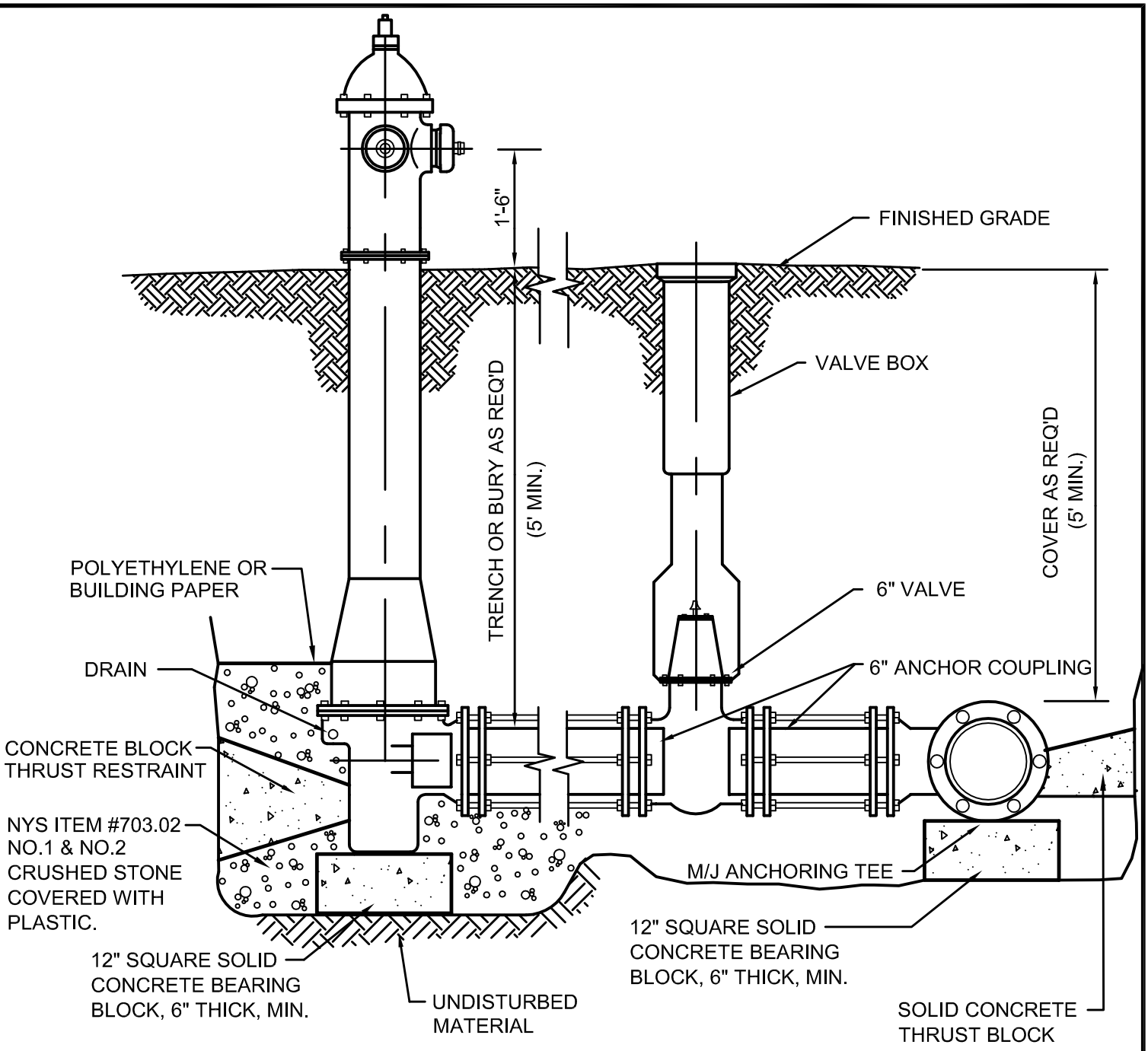

NOTES:

1. WHEN INSTALLING HYDRANTS AND GROUND WATER IS ENCOUNTERED WITHIN 7 FEET OF FINISHED GRADE THE HYDRANT DRAIN OR WEEP HOLES MUST BE TAPPED AND PLUGGED.

2. HYDRANTS SHALL NOT BE LOCATED WITHIN 10 FEET OF SANITARY SEWERS, STORM DRAINS, AND STORMWATER INLETS.

3. HYDRANTS WITH PLUGGED WEEP HOLES SHALL BE FLAGGED TO INDICATE THAT THE BARRELS NEED TO BE PUMPED DRY AFTER EACH USE.

HUNT
607 358 1000
FAX 358 1800
ENGINEERS • ARCHITECTS • SURVEYORS
AIRPORT CORPORATE PARK, 100 HUNT CENTER, HORSEHEADS, N.Y. 14845

HYDRANT INSTALLATION DETAIL

WATER UTILITY DETAILS
TOWN OF ERWIN
STEUBEN COUNTY, NEW YORK

W2
DETAIL

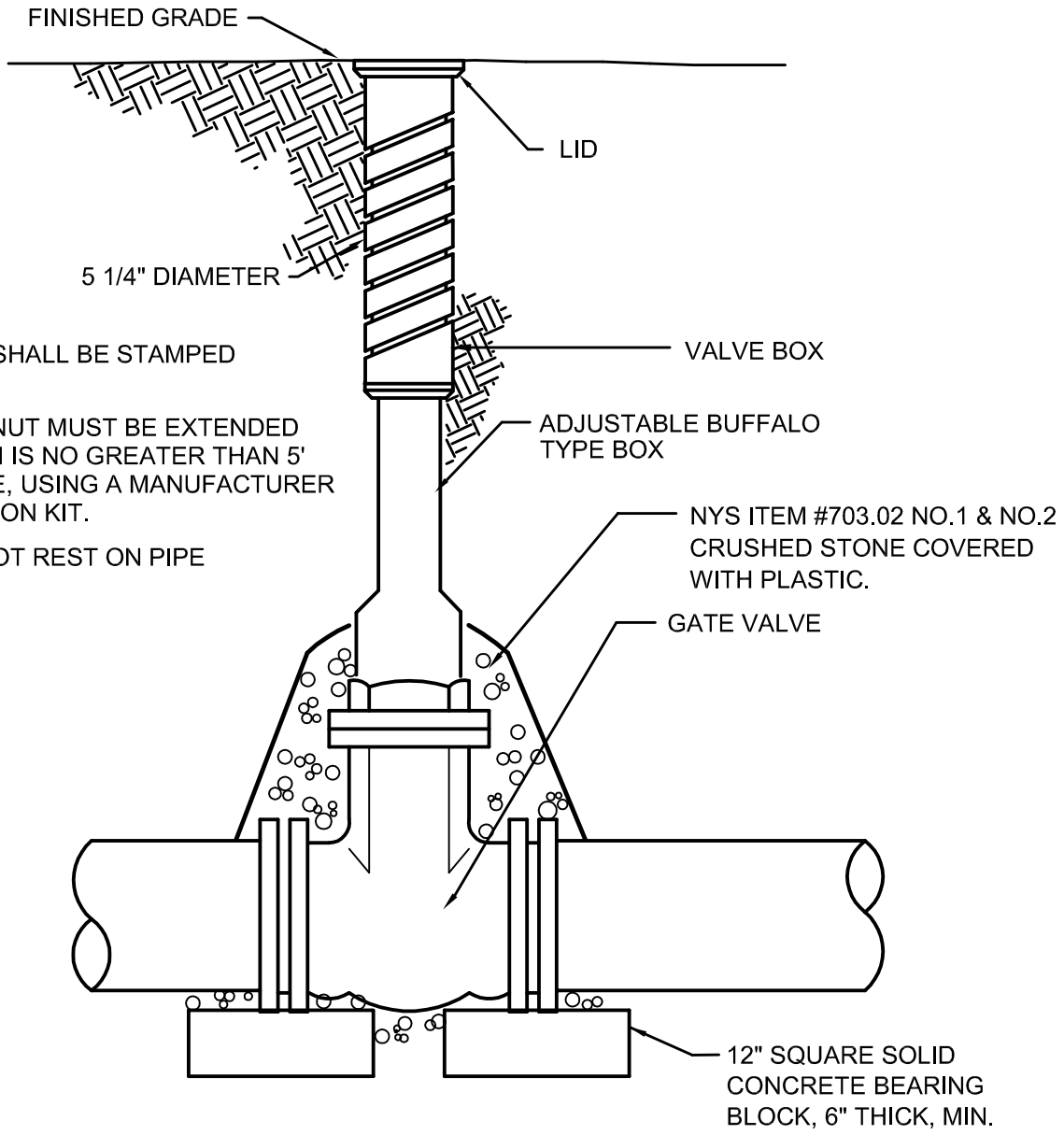

NOTES:

1. VALVE BOX COVER SHALL BE STAMPED "WATER"
2. VALVE OPERATING NUT MUST BE EXTENDED SO THAT THE DEPTH IS NO GREATER THAN 5' FROM THE SURFACE, USING A MANUFACTURER APPROVED EXTENSION KIT.
3. VALVE BOX MUST NOT REST ON PIPE

HUNT
607 358 1000
FAX 358 1800
ENGINEERS • ARCHITECTS • SURVEYORS
AIRPORT CORPORATE PARK, 100 HUNT CENTER, HORSEHEADS, N.Y. 14845

GATE VALVE DETAIL

WATER UTILITY DETAILS
TOWN OF ERWIN
STEUBEN COUNTY, NEW YORK

W3
DETAIL

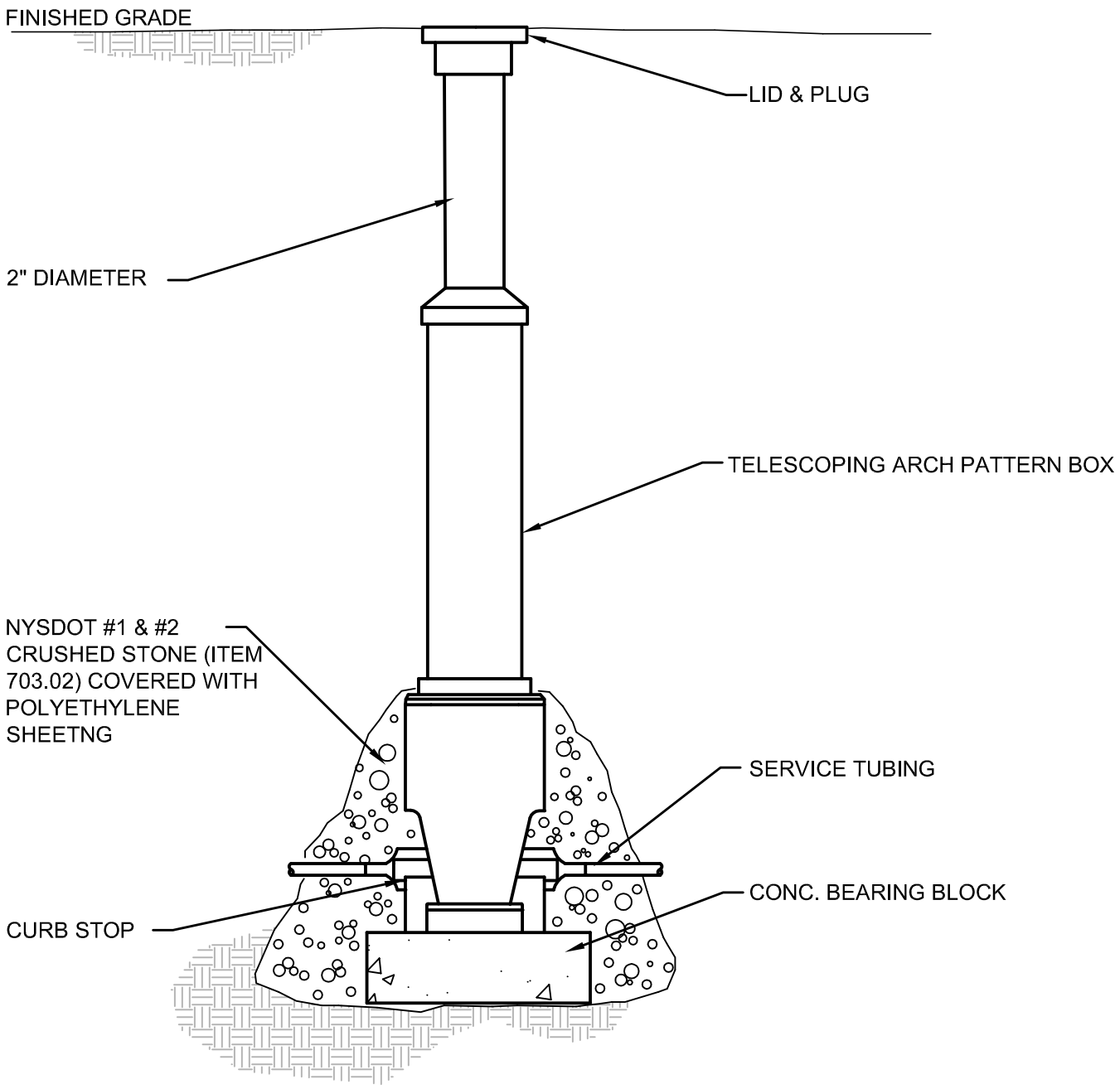

NOTES:

1. FOR USE WITH EXTENSION TYPE CURB BOX.

2. FOR CURB STOPS LESS THAN OR EQUAL TO 1" DIA., NON-TRAFFICKED AREAS ONLY.

HUNT
607 358 1000
FAX 358 1800
ENGINEERS•ARCHITECTS•SURVEYORS
AIRPORT CORPORATE PARK, 100 HUNT CENTER, HORSEHEADS, N.Y. 14845

CURB STOP DETAIL

WATER UTILITY DETAILS
TOWN OF ERWIN
STEUBEN COUNTY, NEW YORK

W4
DETAIL

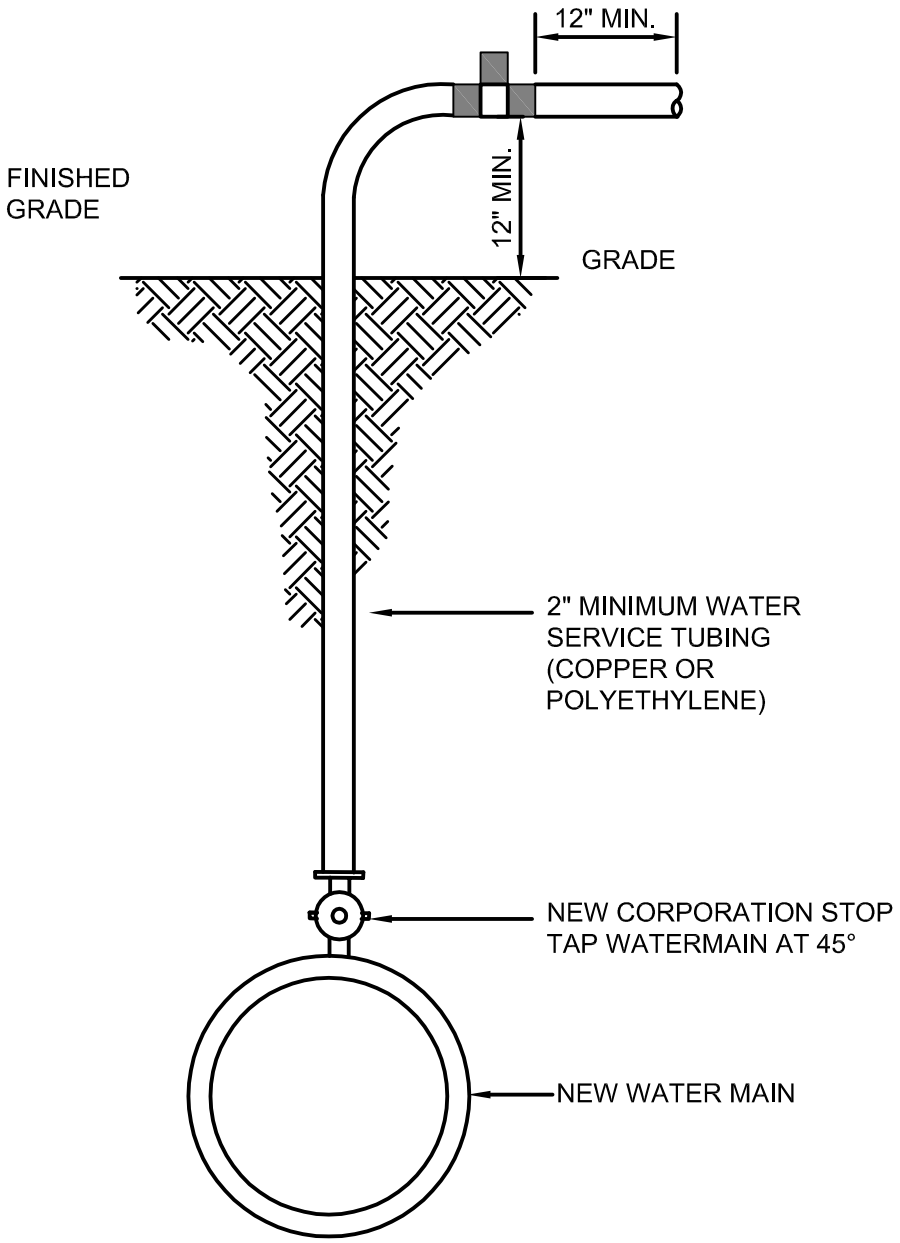

NOTE:

1. UPON NOTIFICATION FROM THE NYS HEALTH DEPARTMENT THAT A SATISFACTORY WATER SAMPLE HAS BEEN OBTAINED, SHUT DOWN CORPORATION STOP AND REMOVE THE SERVICE TUBING.
2. IMMEDIATELY PRIOR TO PLACING THE WATERMAIN IN SERVICE THE CONTRACTOR SHALL REMOVE ALL CORPORATIONS ASSOCIATED WITH TEMPORARY FACILITIES (I.E. SAMPLING TAPS, ETC...) AND REPLACE WITH THREADED BRASS PLUGS.
3. COST FOR TEMPORARY FILLING/ BLOW-OFF TAP TO BE INCLUDED IN PIPE ITEM.

HUNT
607 358 1000
FAX 358 1800
ENGINEERS • ARCHITECTS • SURVEYORS
AIRPORT CORPORATE PARK, 100 HUNT CENTER, HORSEHEADS, N.Y. 14845

DISINFECTION / SAMPLING TAP DETAIL

WATER UTILITY DETAILS
TOWN OF ERWIN
STEUBEN COUNTY, NEW YORK

W5
DETAIL

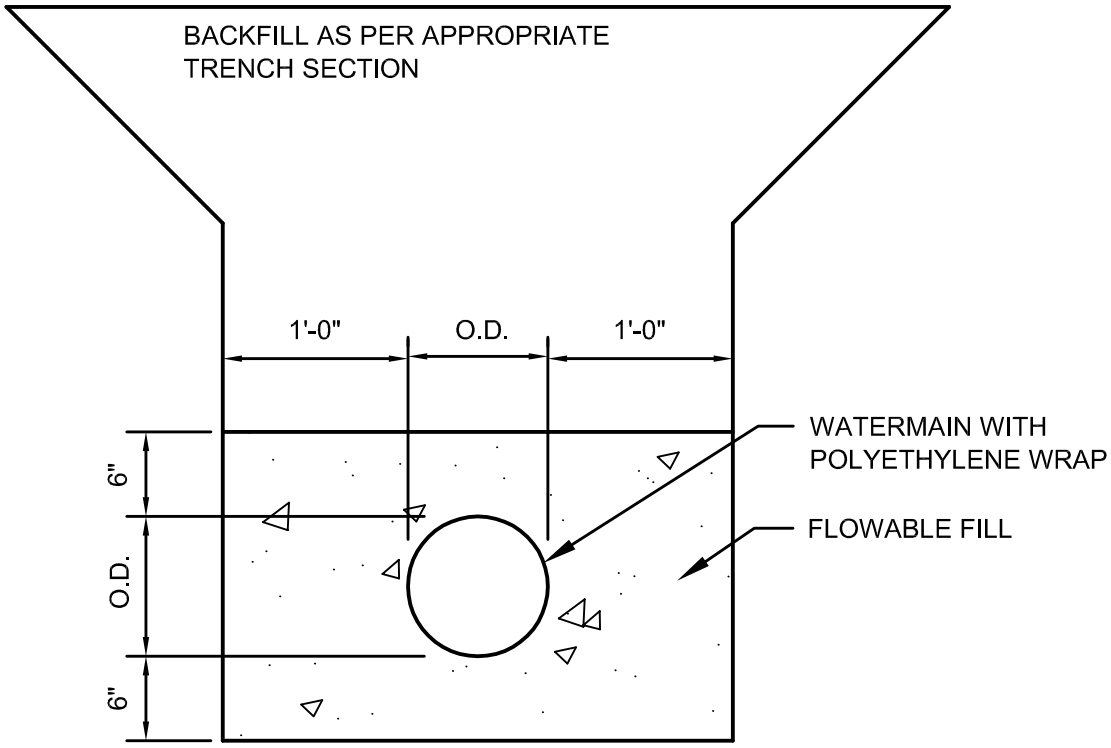

NOTE:
ENCASEMENT OF WATERMAIN WITH FLOWABLE FILL IS REQUIRED WHEN A MINIMUM HORIZONTAL SEPARATION DISTANCE OF 10 FEET CAN NOT BE OBTAINED FROM EXISTING SEWER, CATCH BASINS, MANHOLES, DRYWELLS, OR WHEN INSTALLED PARALLEL TO SEWER PIPING.

HUNT
607 358 1000
FAX 358 1800
ENGINEERS • ARCHITECTS • SURVEYORS
AIRPORT CORPORATE PARK, 100 HUNT CENTER, HORSEHEADS, N.Y. 14845

WATERMAIN ENCASEMENT DETAIL

WATER UTILITY DETAILS
TOWN OF ERWIN
STEUBEN COUNTY, NEW YORK

W6
DETAIL

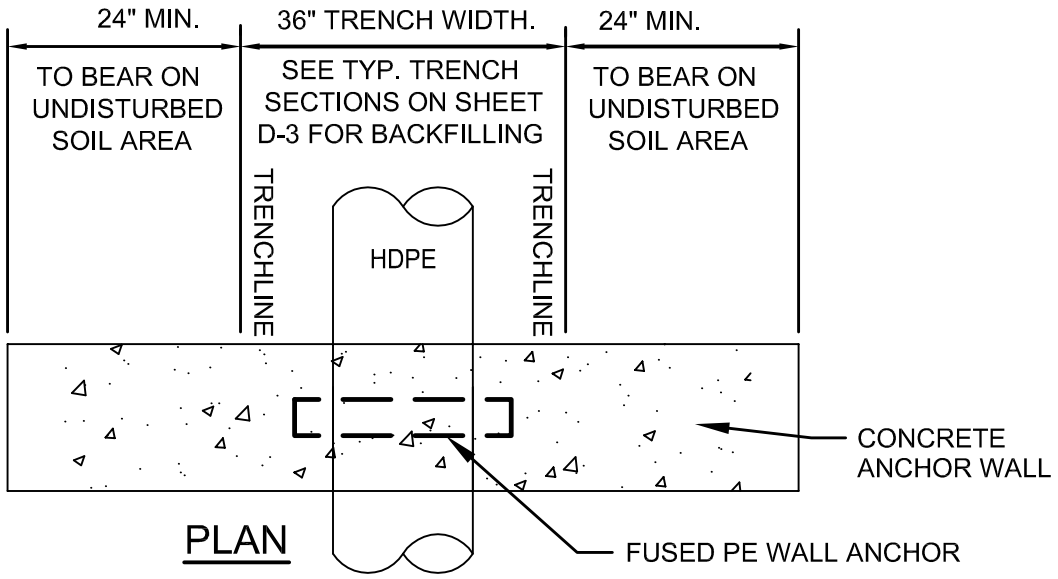

PLAN

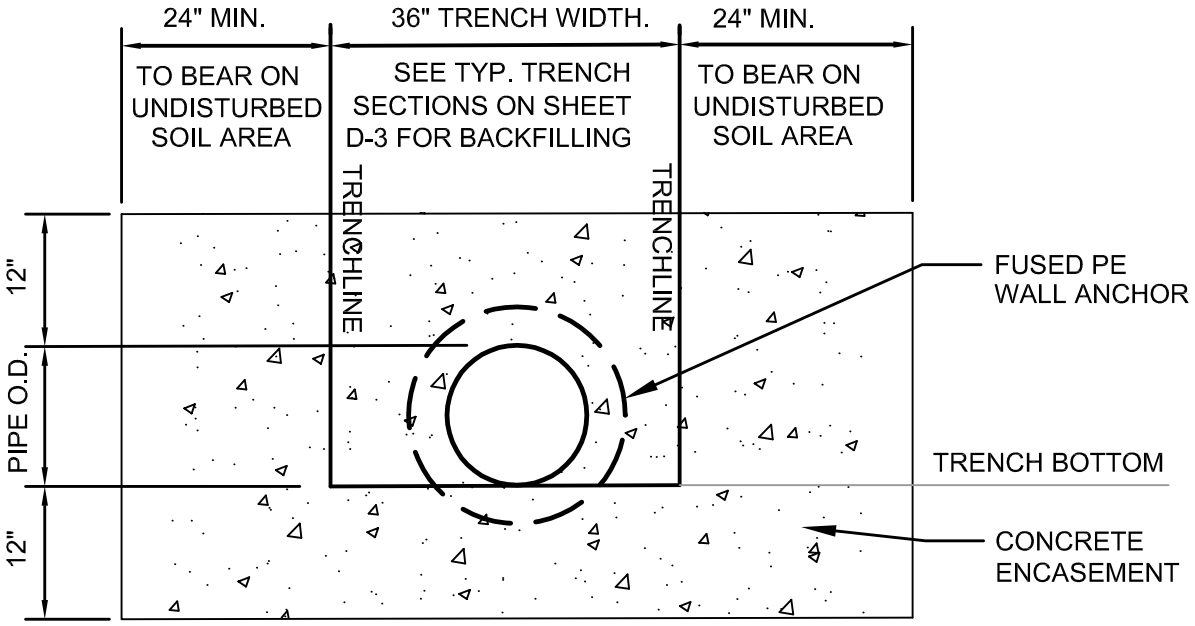

ELEVATION

NOTE:

1. IN-LINE ANCHOR SHALL BE LOCATED AS RECOMMENDED BY THE PIPE MANUFACTURER.

2. THE CONTRACTOR SHALL BACKFILL AROUND THE IN-LINE ANCHOR WITH SELECT BACKFILL MATERIAL TO INTERFACE WITH UNDISTURBED SOILS. THE SELECT BACKFILL MATERIAL SHALL BE COMPACTED TO 95% OF THE STANDARD PROCTOR DENSITY.

3. THE CONTRACTOR SHALL PROVIDE AT LEAST 12" OF CONCRETE ABOVE THE O.D. OF THE HDPE PIPE, BUT WILL BE ALLOWED TO POUR THE CONCRETE TO WITHIN 6" OF THE PROPOSED FINISH GRADE.

4. WALL ANCHORS ARE TO BE INSTALLED AT ALL HDPE/ DUCTILE IRON PIPE CONNECTIONS LOCATED ON EITHER SIDE OF CROSSINGS OVER 50 FOOT IN LENGTH OR AS DIRECTED BY THE OWNER'S REPRESENTATIVE.

HUNT
607 358 1000
FAX 358 1800
ENGINEERS • ARCHITECTS • SURVEYORS
AIRPORT CORPORATE PARK, 100 HUNT CENTER, HORSEHEADS, N.Y. 14845

IN-LINE WALL ANCHOR DETAIL

WATER UTILITY DETAILS
TOWN OF ERWIN
STEUBEN COUNTY, NEW YORK

W7
DETAIL

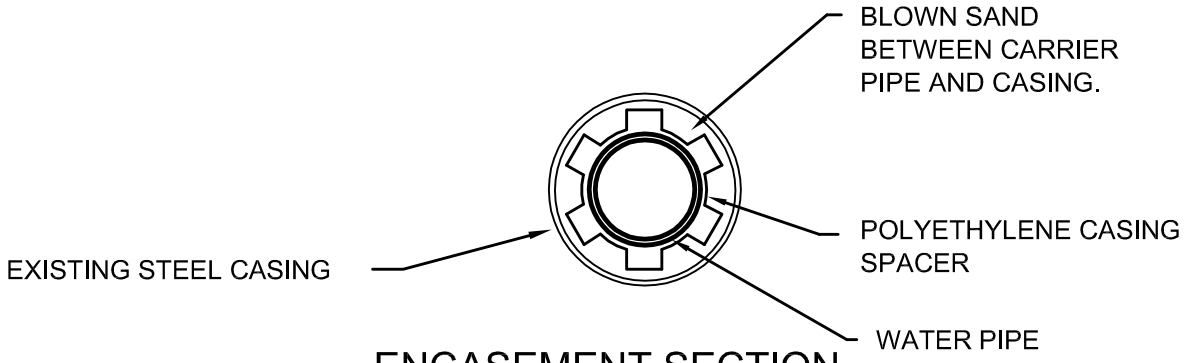

ENCASEMENT SECTION

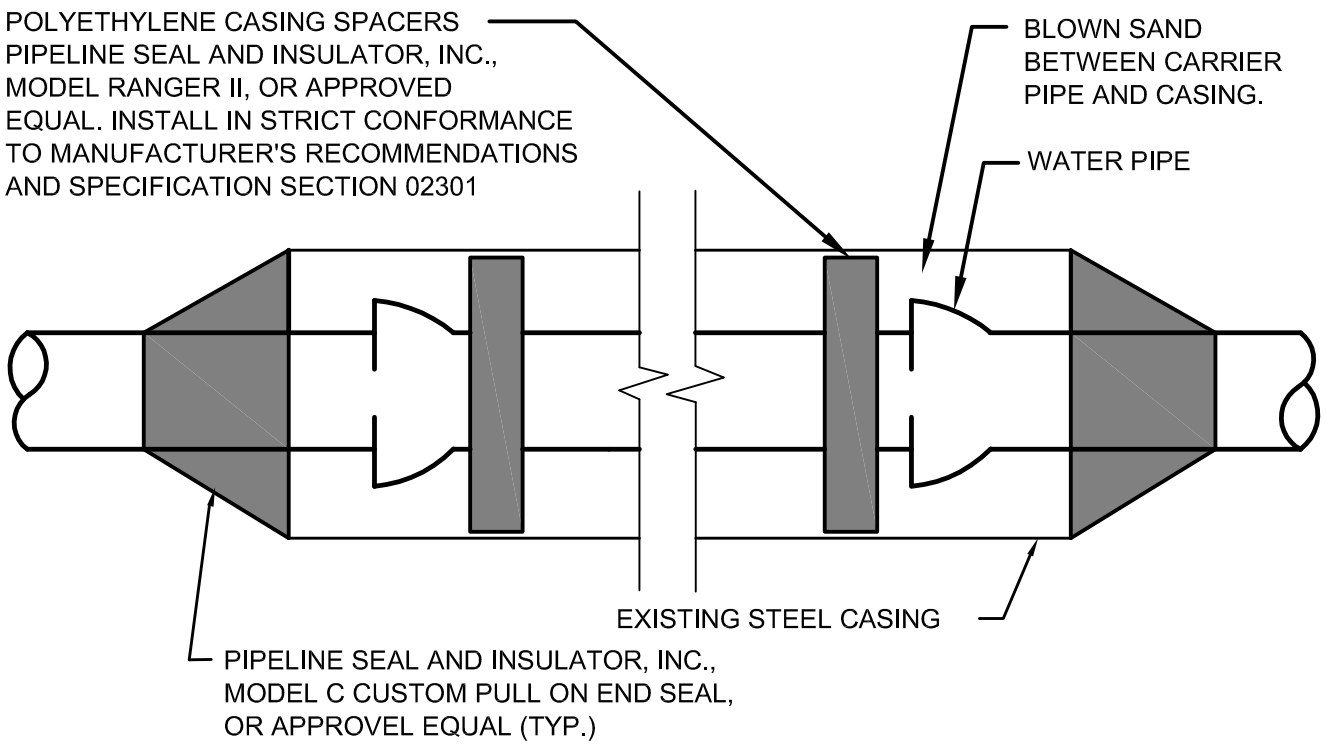

LONGITUDINAL SECTION

HUNT
607 358 1000
FAX 358 1800
ENGINEERS•ARCHITECTS•SURVEYORS
AIRPORT CORPORATE PARK, 100 HUNT CENTER, HORSEHEADS, N.Y. 14845

PIPE CASING DETAIL

WATER UTILITY DETAILS
TOWN OF ERWIN
STEUBEN COUNTY, NEW YORK

W8
DETAIL

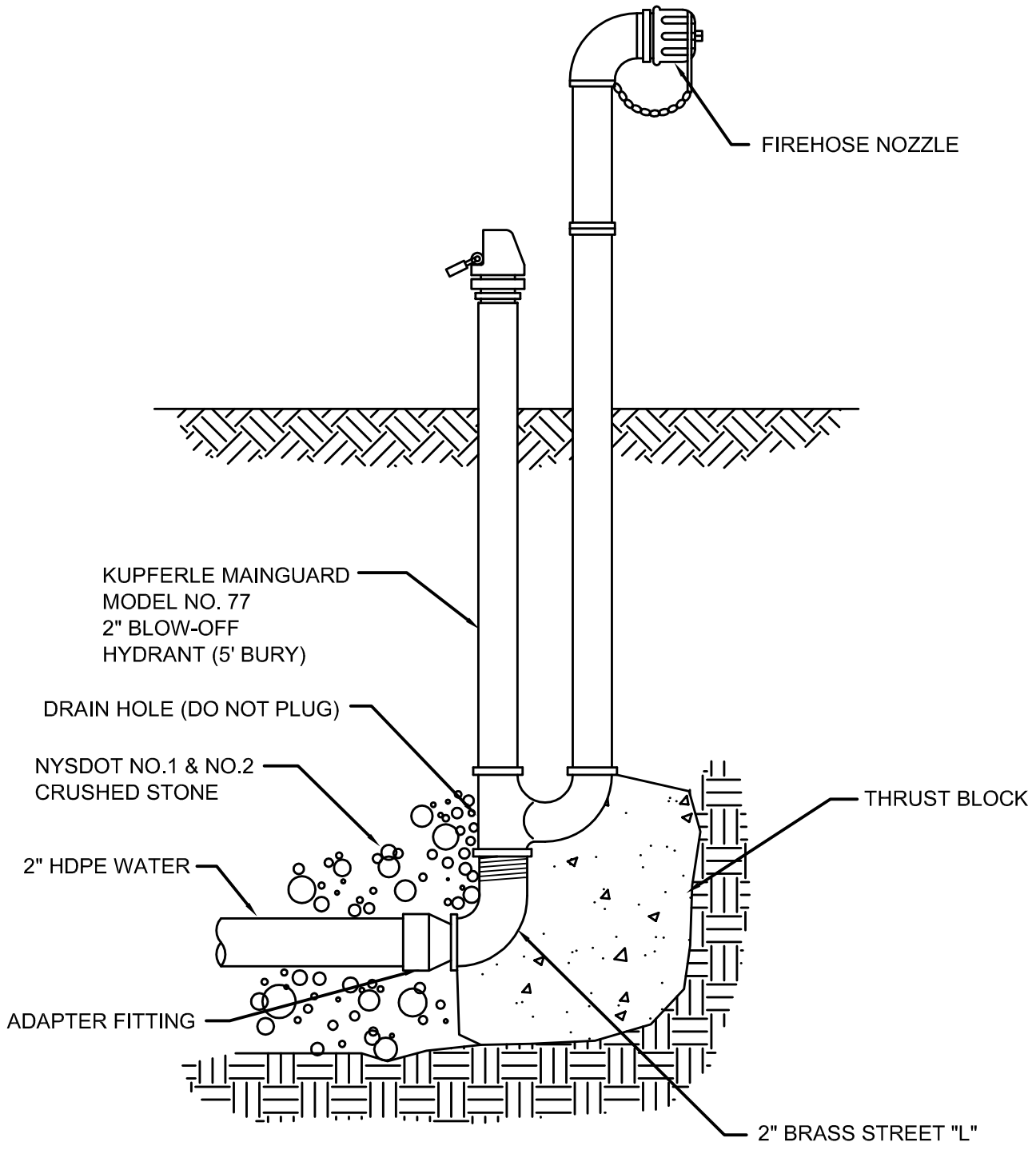

HUNT
607 358 1000
FAX 358 1800
ENGINEERS • ARCHITECTS • SURVEYORS
AIRPORT CORPORATE PARK, 100 HUNT CENTER, HORSEHEADS, N.Y. 14845

BLOW-OFF HYDRANT DETAIL

WATER UTILITY DETAILS
TOWN OF ERWIN
STEUBEN COUNTY, NEW YORK

W9
DETAIL

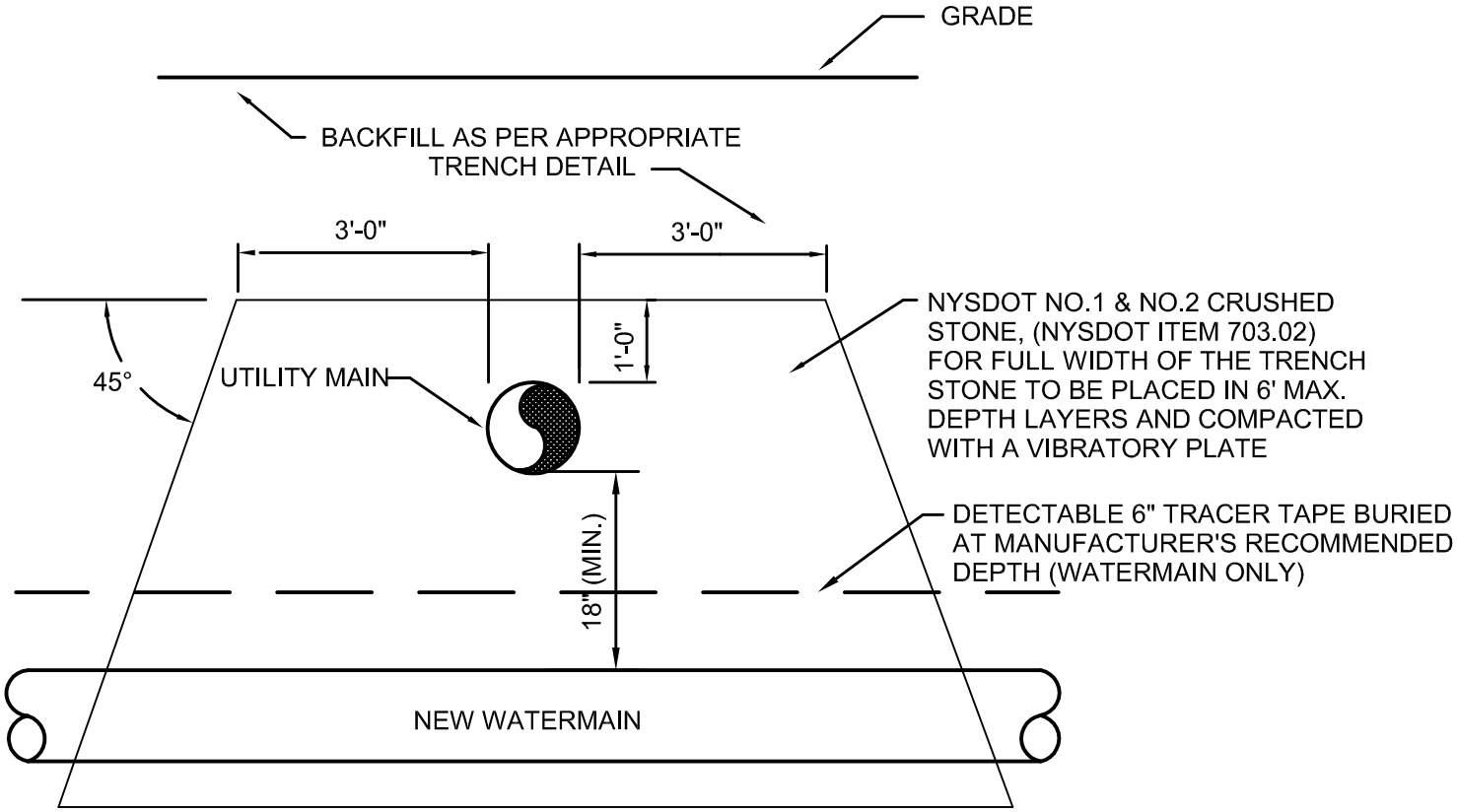

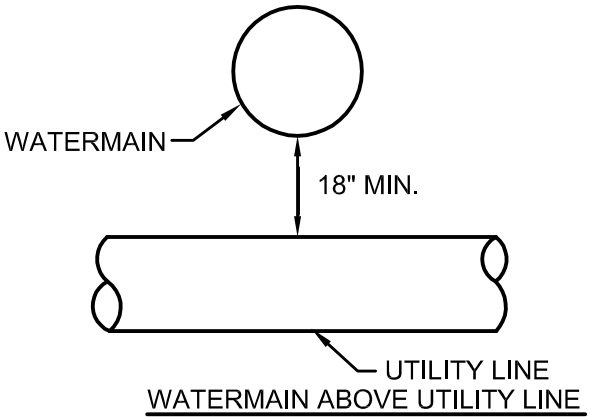

WATERMAIN ABOVE UTILITY LINE

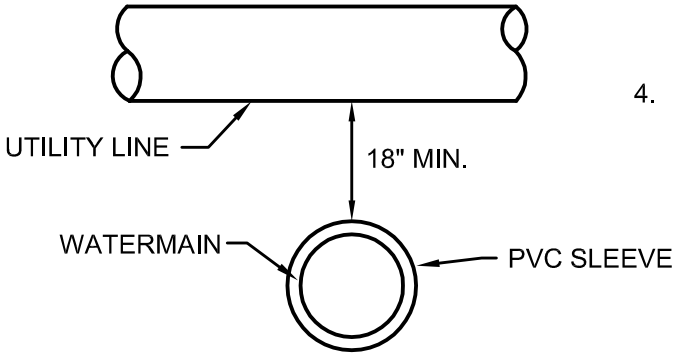

UTILITY LINE ABOVE WATERMAIN

NOTES:

1. AT CROSSINGS OF EXISTING SEWERS, ONE FULL LENGTH (20' MIN.) OF WATER PIPE SHALL BE LOCATED SO BOTH JOINTS WILL BE AS FAR FROM THE SEWER AS POSSIBLE.
2. AT CROSSING OF NEW SEWERS, WATERLINE AND SEWER LINE PIPE LENGTHS SHALL BE CENTERED AT CROSSING. EACH LENGTH OF PIPE TO BE 20' MINIMUM.
3. WHEN UTILITY LINES ARE ABOVE WATERMAINS, WATERMAINS SHALL BE INSTALLED WITH PVC CASING FOR 10 FT. EACH SIDE OF THE CROSSING. SLEEVE TO BE CONTINUOUS, NO JOINTS, AND THE I.D. MUST BE 2" GREATER THAN THE O.D. OF THE CARRIER PIPE BELL DIMENSION.
4. DESCRIBED MEASURES ARE NOT ALLOWED FOR USE NEAR SEWER CATCH BASINS, DRYWELLS, MANHOLES, OR WHEN WATERLINE IS INSTALLED WITHIN 10 FEET AND PARALLEL TO SEWER PIPING.

HUNT
607 358 1000
FAX 358 1800
ENGINEERS • ARCHITECTS • SURVEYORS
AIRPORT CORPORATE PARK, 100 HUNT CENTER, HORSEHEADS, N.Y. 14845

TYPICAL UTILITY CROSSING DETAILS

WATER UTILITY DETAILS
TOWN OF ERWIN
STEUBEN COUNTY, NEW YORK

W10
DETAIL

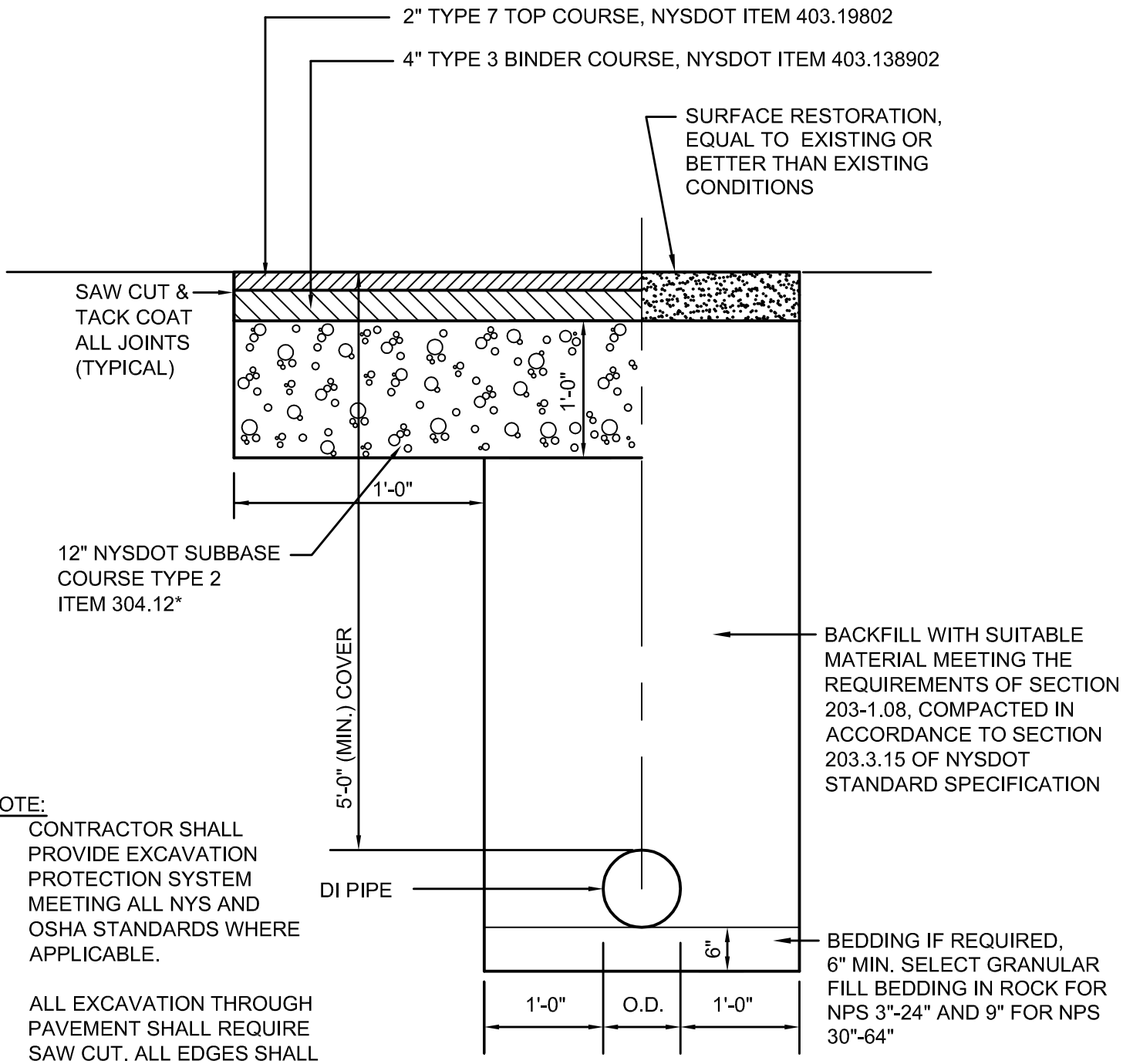

NOTE:

1. CONTRACTOR SHALL PROVIDE EXCAVATION PROTECTION SYSTEM MEETING ALL NYS AND OSHA STANDARDS WHERE APPLICABLE.

2. ALL EXCAVATION THROUGH PAVEMENT SHALL REQUIRE SAW CUT. ALL EDGES SHALL BE TACK COAT AND ALL SEAMS CRACK SEALED.

* INSTALLATION WITHIN TOWN OF ERWIN ROW (LOCAL ROAD)

HUNT
607 358 1000
FAX 358 1800
ENGINEERS • ARCHITECTS • SURVEYORS
AIRPORT CORPORATE PARK, 100 HUNT CENTER, HORSEHEADS, N.Y. 14845

DUCTILE IRON WATERMAIN TRENCH SECTION

WATER UTILITY DETAILS
TOWN OF ERWIN
STEUBEN COUNTY, NEW YORK

W11
DETAIL

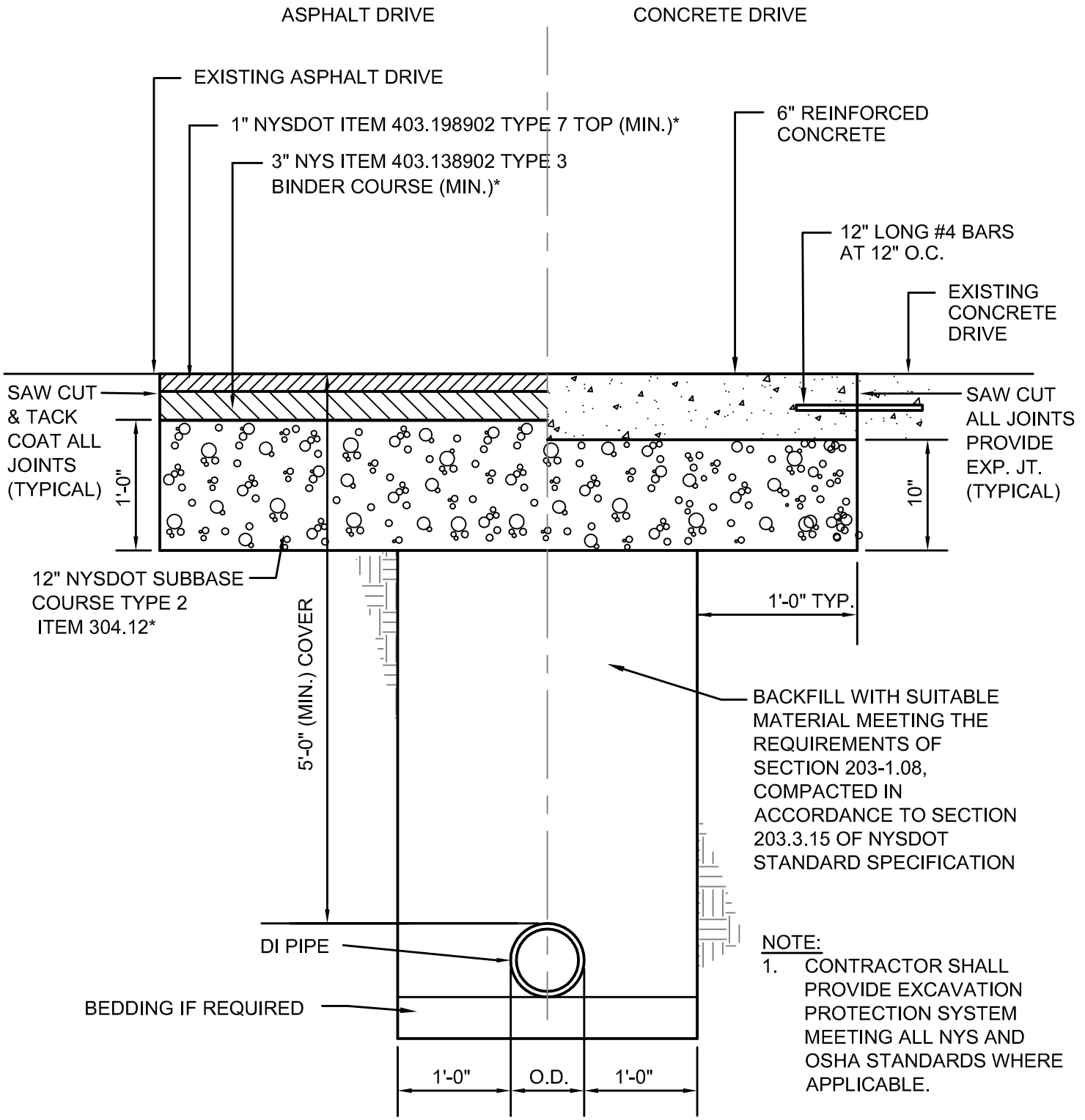

NOTE:

1. CONTRACTOR SHALL PROVIDE EXCAVATION PROTECTION SYSTEM MEETING ALL NYS AND OSHA STANDARDS WHERE APPLICABLE.

2. ALL EXCAVATION THROUGH PAVEMENT SHALL REQUIRE SAW CUT. ALL EDGES SHALL BE TACK COAT AND ALL SEAMS CRACK SEALED.

HUNT
607 358 1000
FAX 358 1800
ENGINEERS • ARCHITECTS • SURVEYORS
AIRPORT CORPORATE PARK, 100 HUNT CENTER, HORSEHEADS, N.Y. 14845

DUCTILE IRON WATERMAIN TRENCH SECTION

WATER UTILITY DETAILS
TOWN OF ERWIN
STEUBEN COUNTY, NEW YORK

W12
DETAIL

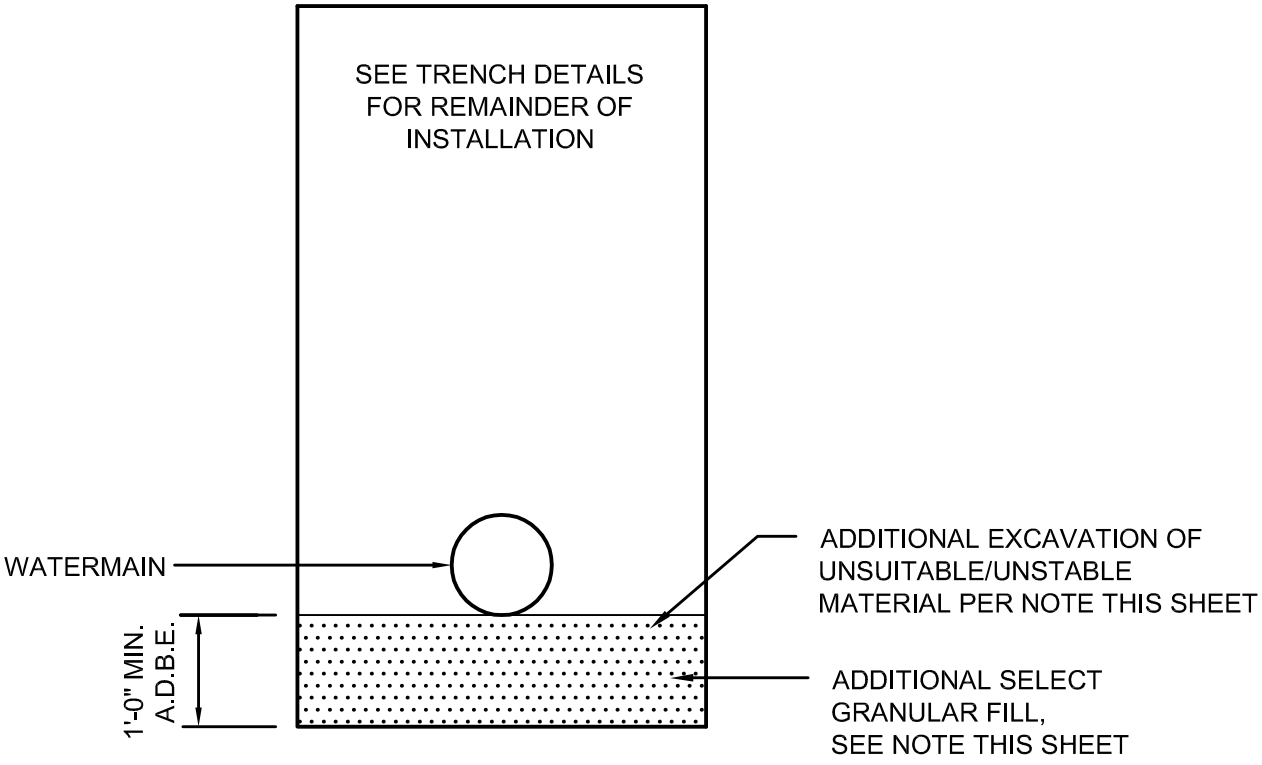

NOTE: IF UNSTABLE OR UNSUITABLE SOIL CONDITIONS ARE ENCOUNTERED NEAR THE INVERT ELEVATION, A MINIMUM OF 1' AND A MAXIMUM OF 2' OF MATERIAL SHALL BE EXCAVATED AS DIRECTED BY ENGINEER AND REPLACED WITH SELECT GRANULAR FILL.

HUNT
607 358 1000
FAX 358 1800
ENGINEERS•ARCHITECTS•SURVEYORS
AIRPORT CORPORATE PARK, 100 HUNT CENTER, HORSEHEADS, N.Y. 14845

DUCTILE IRON WATERMAIN TRENCH SECTION
(IN UNSUITABLE SOIL CONDITIONS)

WATER UTILITY DETAILS
TOWN OF ERWIN
STEUBEN COUNTY, NEW YORK

W13
DETAIL

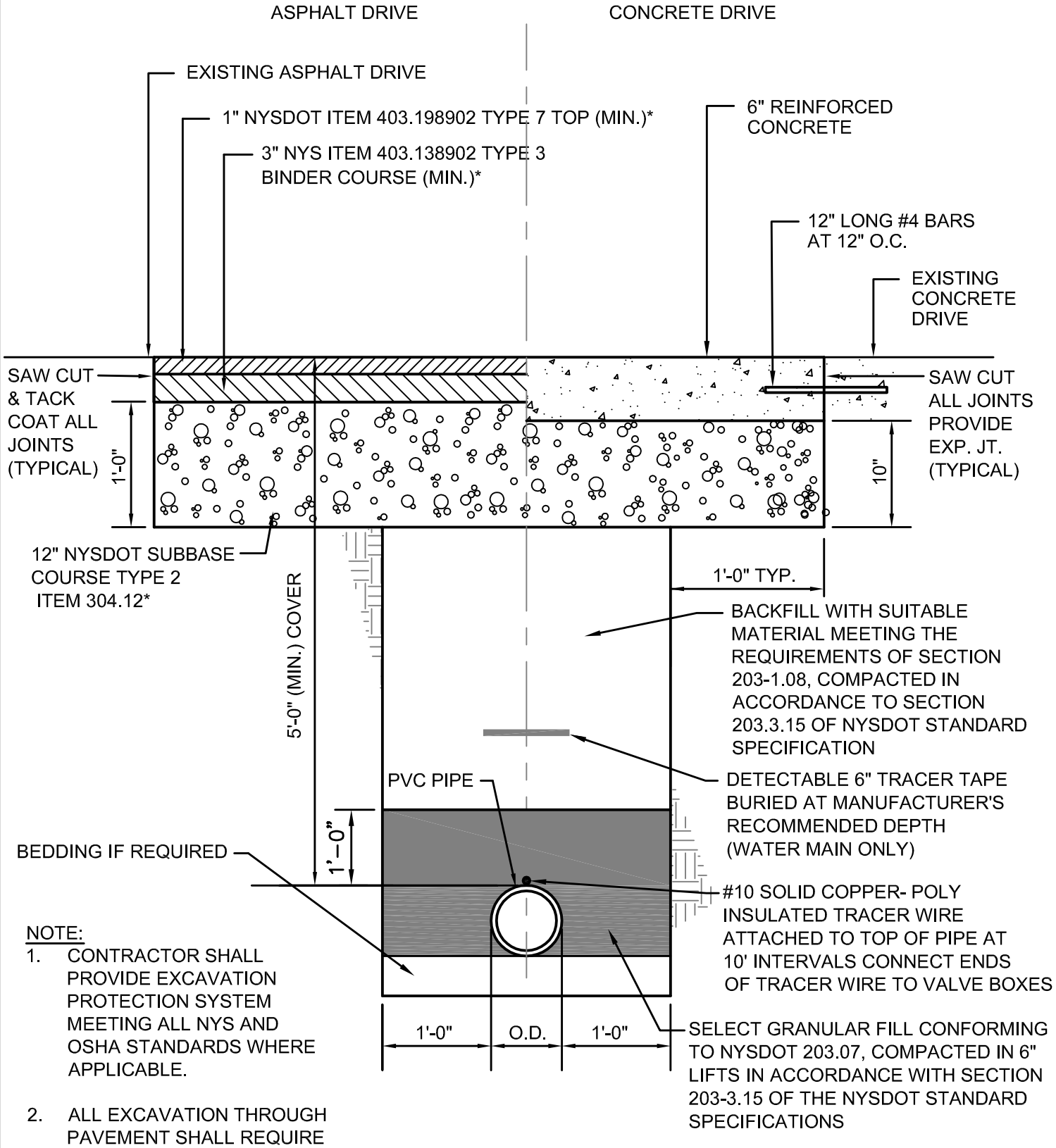

NOTE:

1. CONTRACTOR SHALL PROVIDE EXCAVATION PROTECTION SYSTEM MEETING ALL NYS AND OSHA STANDARDS WHERE APPLICABLE.

2. ALL EXCAVATION THROUGH PAVEMENT SHALL REQUIRE SAW CUT. ALL EDGES SHALL BE TACK COAT AND ALL SEAMS CRACK SEALED.

HUNT
607 358 1000
FAX 358 1800
ENGINEERS • ARCHITECTS • SURVEYORS
AIRPORT CORPORATE PARK, 100 HUNT CENTER, HORSEHEADS, N.Y. 14845

PVC WATERMAIN TRENCH SECTION (ALTERNATE)

WATER UTILITY DETAILS
TOWN OF ERWIN
STEUBEN COUNTY, NEW YORK

W14
DETAIL

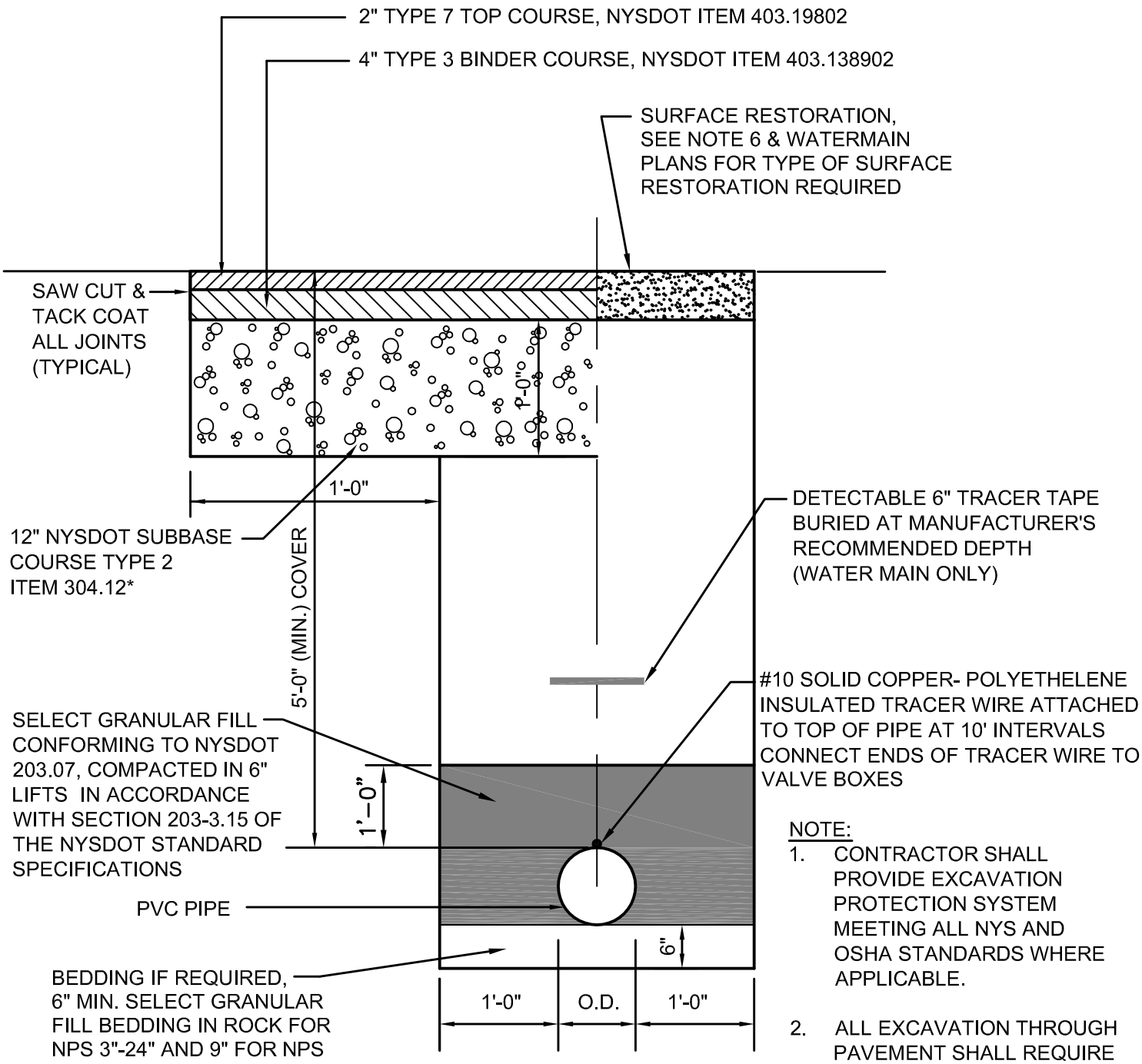

NOTE:

1. CONTRACTOR SHALL PROVIDE EXCAVATION PROTECTION SYSTEM MEETING ALL NYS AND OSHA STANDARDS WHERE APPLICABLE.
2. ALL EXCAVATION THROUGH PAVEMENT SHALL REQUIRE SAW CUT. ALL EDGES SHALL BE TACK COAT AND ALL SEAMS CRACK SEALED.

* INSTALLATION WITHIN TOWN OF ERWIN ROW (LOCAL ROAD)

HUNT
607 358 1000
FAX 358 1800
ENGINEERS • ARCHITECTS • SURVEYORS
AIRPORT CORPORATE PARK, 100 HUNT CENTER, HORSEHEADS, N.Y. 14845

PVC WATERMAIN TRENCH SECTION (ALTERNATE)

WATER UTILITY DETAILS
TOWN OF ERWIN
STEUBEN COUNTY, NEW YORK

W15
DETAIL

EXCAVATION PAYMENT WIDTHS	
NPS SIZE	TRENCH WIDTH
3	36"
4	36"
6	36"
8	36"
10	36"
12	36"
14	38"
16	40"
18	42"
20	44"
24	48"
30	54"
36	60"
42	66"
48	72"
54	78"
60	84"
64	88"

HUNT
607 358 1000
FAX 358 1800
ENGINEERS • ARCHITECTS • SURVEYORS
AIRPORT CORPORATE PARK, 100 HUNT CENTER, HORSEHEADS, N.Y. 14845

EXCAVATION TABLE

WATER UTILITY DETAILS
TOWN OF ERWIN
STEUBEN COUNTY, NEW YORK

W16
DETAIL

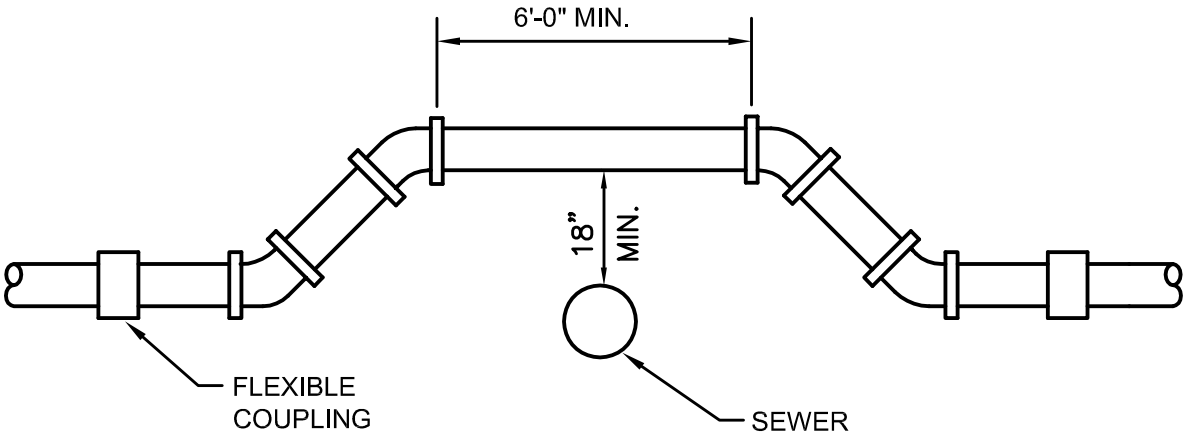

WATER LINE ABOVE SEWER

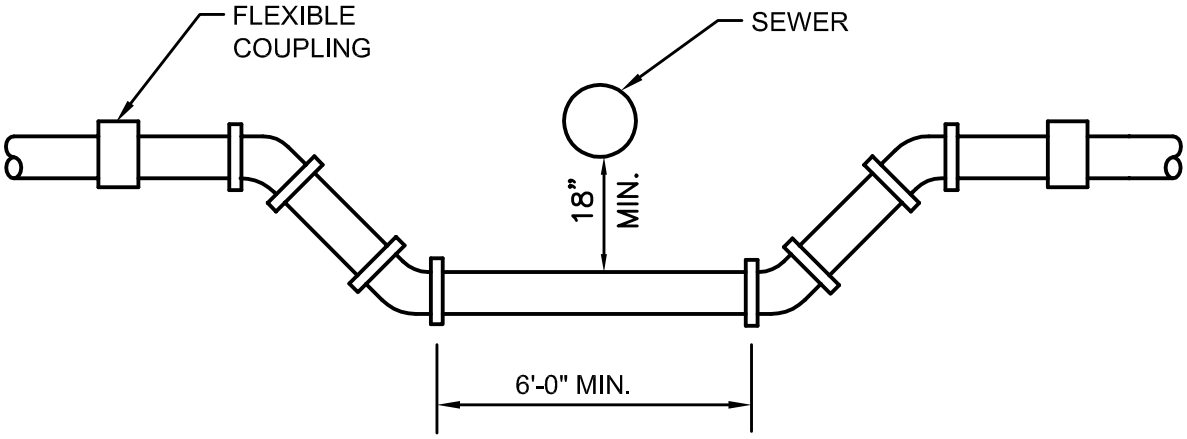

SEWER LINE ABOVE WATER

1 WATERMAIN RELOCATION DETAIL

SCALE: N.T.S.

HUNT
607 358 1000
FAX 358 1800
ENGINEERS • ARCHITECTS • SURVEYORS
AIRPORT CORPORATE PARK, 100 HUNT CENTER, HORSEHEADS, N.Y. 14845

WATERMAIN RELOCATION DETAIL

WATER UTILITY DETAILS
TOWN OF ERWIN
STEUBEN COUNTY, NEW YORK

W17
DETAIL

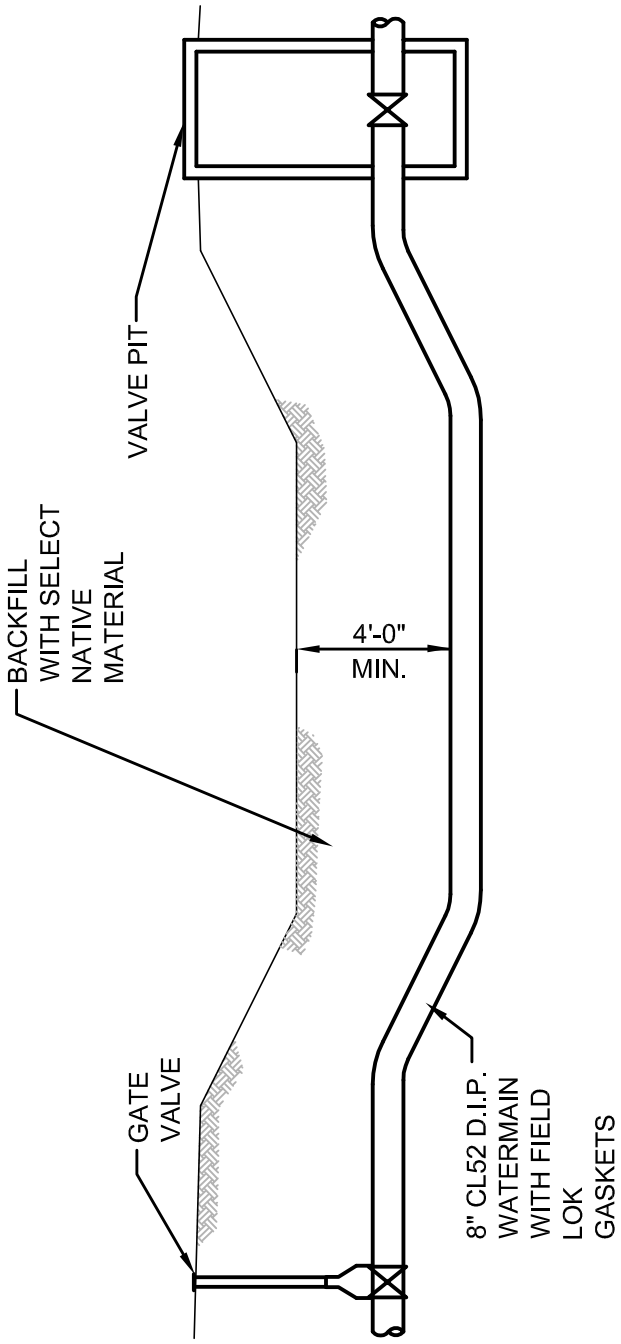

1 STREAM CROSSING UTILITY DETAIL

SCALE: N.T.S.

HUNT
607 358 1000
FAX 358 1800
ENGINEERS • ARCHITECTS • SURVEYORS
AIRPORT CORPORATE PARK, 100 HUNT CENTER, HORSEHEADS, N.Y. 14845

STREAM CROSSING UTILITY DETAIL

WATER UTILITY DETAILS
TOWN OF ERWIN
STEUBEN COUNTY, NEW YORK

W18
DETAIL

AMENDMENTS

1. June 21, 2014 - Added Detail L23 entitled "Turn Around Detail"